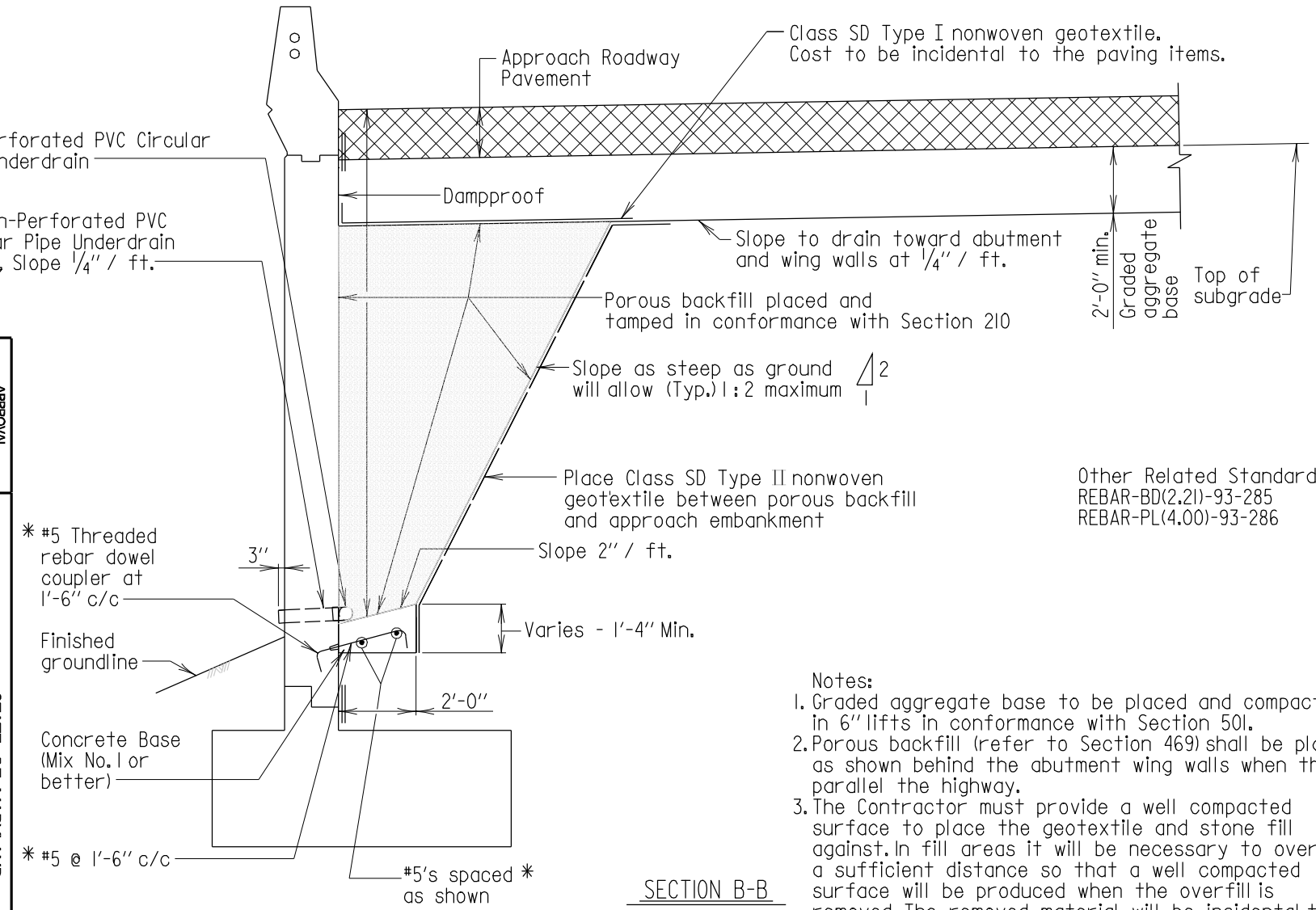

SECTION B-B
Scale: None

Other Related Standards
REBAR-BD(2.21)-93-285
REBAR-PL(4.00)-93-286

Notes:
1. Graded aggregate base to be placed and compacted in 6" lifts in conformance with Section 501.
2. Porous backfill (refer to Section 469) shall be placed as shown behind the abutment wing walls when they parallel the highway.
3. The Contractor must provide a well compacted surface to place the geotextile and stone fill against. In fill areas it will be necessary to overfill a sufficient distance so that a well compacted surface will be produced when the overfill is removed. The removed material will be incidental to the pertinent structure concrete item.
4. The cost of the stone graded aggregate base and geotextile will be incidental to the pertinent structure concrete item.
5. For bridges with wing walls that are not parallel to highway see std. no. RW(0.01)-80-100 for details.

* If 1'-6" width of the concrete base is poured to rest on top of footing, the reinforcing can be eliminated. No additional compensation will be allowed for this option.

STATE OF MARYLAND
DEPARTMENT OF TRANSPORTATION
STATE HIGHWAY ADMINISTRATION
OFFICE OF STRUCTURES

DRAINAGE SYSTEM AND BACKFILL FOR WING WALLS THAT ARE PARALLEL TO THE HIGHWAY

APPROVAL
DIRECTOR OFFICE OF STRUCTURES
DATE: 9/14/98

REVISIONS

SHA	FHWA
7-30-99	.
1-22-01	.
10-9-07	.

FHWA APPROVAL
DATE: .

STANDARD NO. BR-SB(0.01)-80-101

SHEET 5 OF 5

SUBSTRUCTURE ABUT.