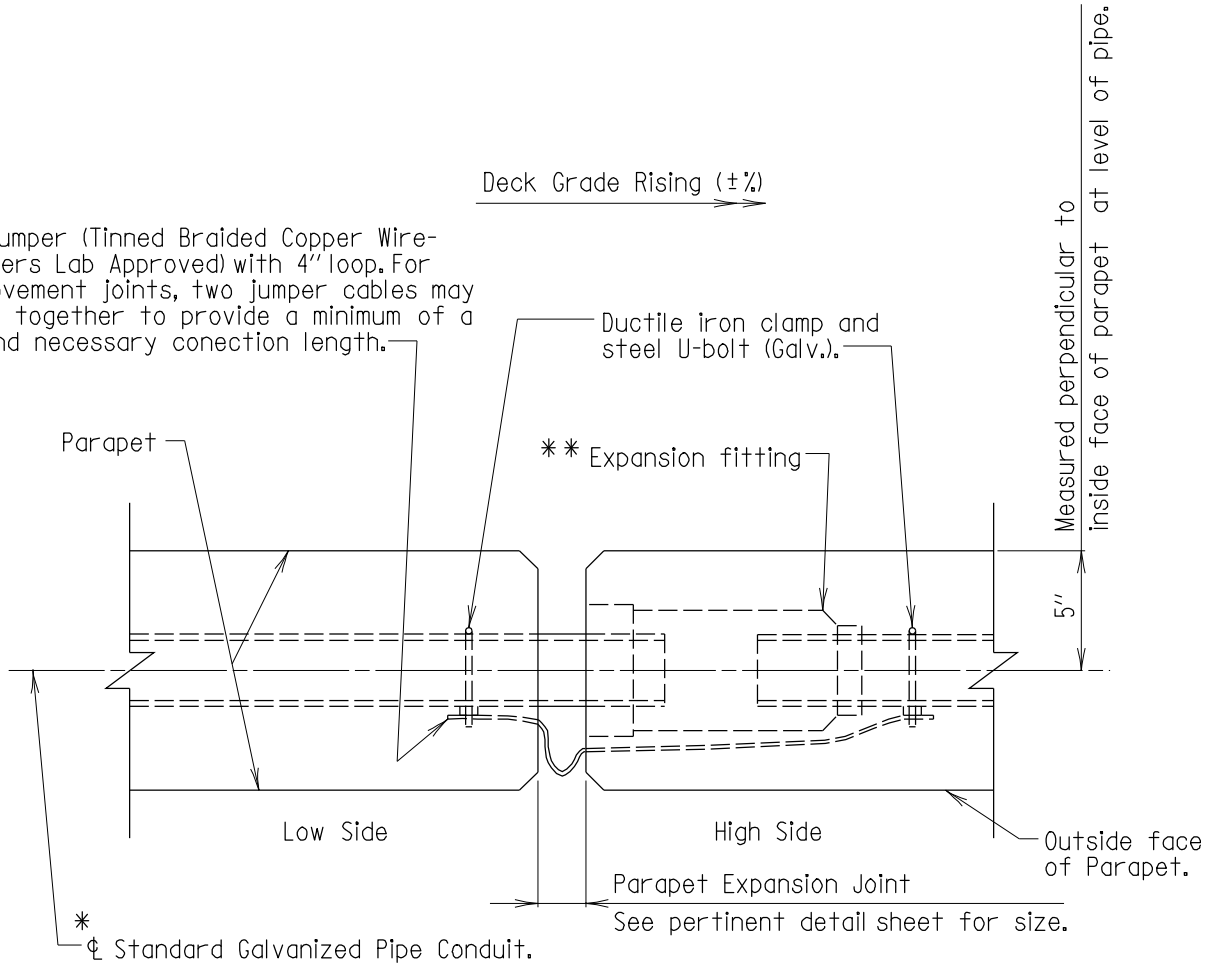

SECTION

Scale: 1½" = 1'-0"

* For conduit size see Superstructure "Typical Section" sheet. Vertical location of ℄ of this conduit shall be at least 4" below bottom of railing or fencing anchorage systems.

** Expansion fittings for use with rigid galvanized steel conduit shall consist of a malleable iron head and steel sleeve which shall be hot-dipped galvanized and assembled with a watertight packing gland, an insulated bushing, pressure ring and gasket and a tinned-copper bond to assure continuity of ground. The fitting shall provide, unless otherwise noted on the plans: 4" of movement for all compression seal roadway joints and 8" of movement for all other roadway joints, such as steel finger joints.

Notes:

1. Place expansion joint in pipe conduit and parapet at every expansion joint at supports in bridge deck.
2. #10 galvanized pull wire to be provided for full length of conduit and left in place.
3. Contractor may furnish either PVC conduit as shown on sheet 2 of 2 or material shown on this detail. However only one type can be used throughout a structure.

APPROVAL	
E.S. Freedman DIRECTOR OFFICE OF STRUCTURES	
DATE: 6/20/75	
REVISIONS	
SHA	FHWA
7-5-83	11-29-85
9-1-83	11-29-85
12-29-89	6-8-90
1-22-01	·

FHWA APPROVAL
DATE: 8-24-76

STATE OF MARYLAND
DEPARTMENT OF TRANSPORTATION
STATE HIGHWAY ADMINISTRATION
OFFICE OF STRUCTURES

EXPANSION JOINT FOR CONDUIT IN PARAPET

STANDARD NO. BR-SS(0.01)-75-13 SHEET 1 OF 2

SUPER-OTHER

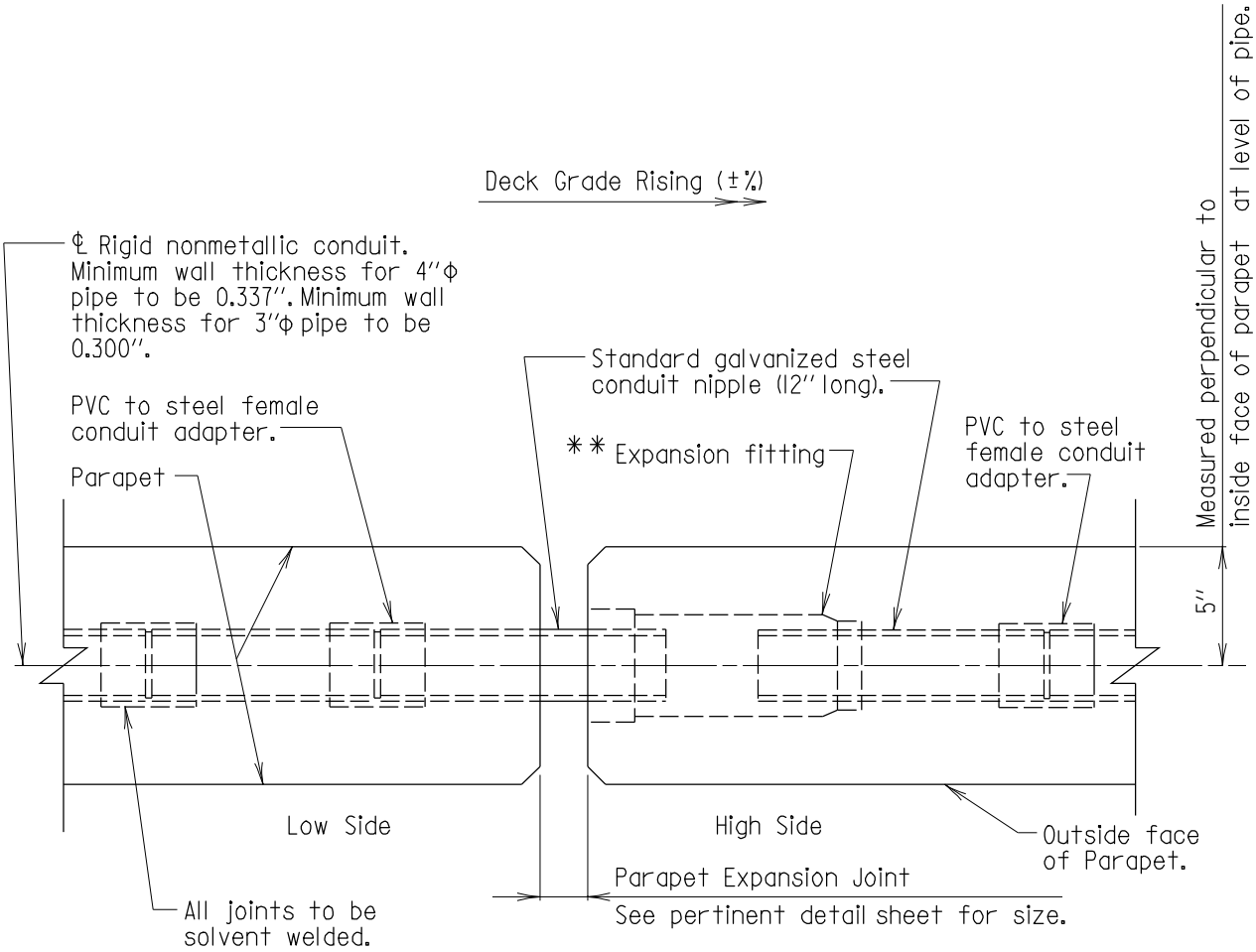

Note: No bonding jumper cable is required.

SECTION

Scale: 1½" = 1'-0"

* For conduit size see Superstructure "Typical Section" sheet. Vertical location of ℄ of this conduit shall be at least 4" below bottom of railing or fencing anchorage systems.

** Expansion fittings for use with rigid galvanized steel conduit shall consist of a malleable iron head and steel sleeve which shall be hot-dipped galvanized and assembled with a watertight packing gland, an insulated bushing, pressure ring and gasket and a tinned-copper bond to assure continuity of ground. The fitting shall provide, unless otherwise noted on the plans: 4" of movement for all compression seal roadway joints and 8" of movement for all other roadway joints, such as steel finger joints.

Notes:

1. Place expansion joint in pipe conduit and parapet at every expansion joint at supports in bridge deck.
2. #10 galvanized pull wire to be provided for full length of conduit and left in place.
3. All pipe and expansion joint must be U.L. approved for encasement in concrete.
4. Fittings to be PVC, except for expansion joint.
5. Nonmetallic conduit shall conform to 921.07.02.

APPROVAL	
E.S. Freedman DIRECTOR OFFICE OF STRUCTURES	
DATE: 9/27/83	
REVISIONS	
SHA	FHWA
1-3-90	·
5-26-92	·
1-4-94	·
1-22-01	·

FHWA APPROVAL	
DATE: 11-29-85	

STATE OF MARYLAND
DEPARTMENT OF TRANSPORTATION
STATE HIGHWAY ADMINISTRATION
OFFICE OF STRUCTURES

EXPANSION JOINT FOR CONDUIT IN PARAPET

STANDARD NO. BR-SS(0.01)-75-13 SHEET 2 OF 2

SUPER-OTHER

GENERAL NOTES

Specifications:	Latest S.H.A. Specifications and Special Provisions for materials and construction. Latest AASHTO Standard Specifications for Highway Bridges for design.
Materials:	Scuppers shall be fiberglass conforming to 921.11. Gratings and 3/16" bands to be structural steel conforming to ASTM A 709 Grade 36, and epoxy coated. Elastomeric pad shall conform to 910.02 using 60 Durometer hardness. Stainless steel bolts shall conform to ASTM A 193, Identification Symbol B 8 Type 304.
Epoxy Bonding Compound:	All fiberglass that will be in contact with elastomeric material shall be coated with epoxy bonding compound conforming to 921.04.
Epoxy Coating:	All steel angles and additional #5 bars shall be epoxy coated as specified in 917.02 except that the color shall match Federal Test Method 595, Color No. 26440.
Measurement and Payment:	The furnishing, fabricating, erecting, etc. of all new scuppers for the bridge, complete in place, will be measured and paid for at the Contract unit price per each for Scupper item regardless of the length of the downspouts, etc. If no specific item appears in the Invitation for Bids for the Scupper then the cost shall be included in the pertinent Superstructure Concrete item.

APPROVAL		
R.S. Freedman DIRECTOR OFFICE OF STRUCTURES DATE: 7/25/80		
REVISIONS		
SHA	FHWA	
4-10-86	6-8-90	
12-27-93	·	
2-7-94	·	
1-22-01	·	

FHWA APPROVAL
DATE: 6-8-90

STATE OF MARYLAND
DEPARTMENT OF TRANSPORTATION
STATE HIGHWAY ADMINISTRATION
OFFICE OF STRUCTURES

TYPE I BRIDGE SCUPPER

STANDARD NO. BR-SS(0.03)-80-112 SHEET 1 OF 4

SUPER - OTHER

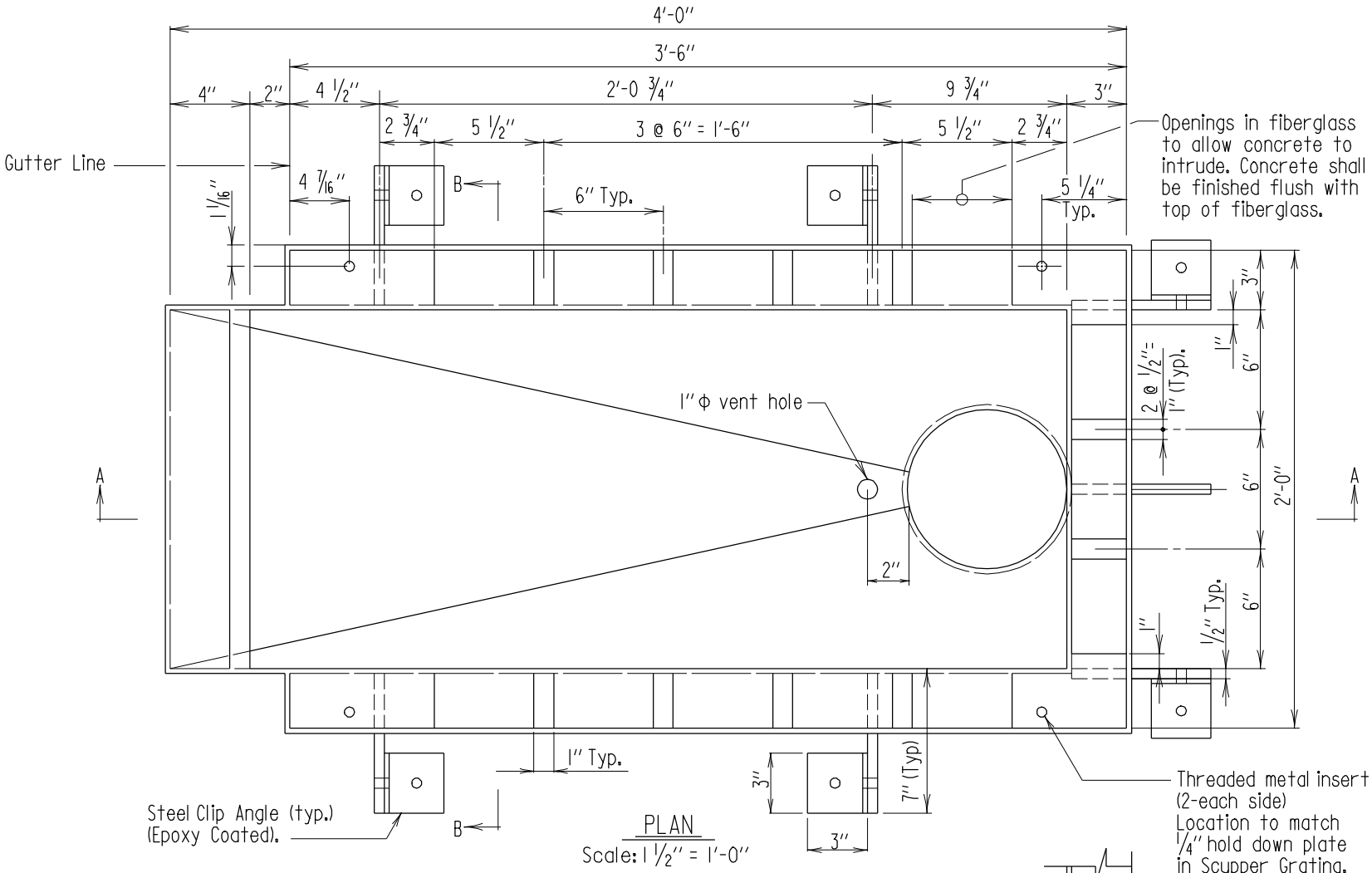

PLAN

Scale: 1 1/2" = 1'-0"

Note:

1. Wood forms may be used in the area of the scupper, as approved by the Engineer.
2. There must be a minimum of 5" of concrete under entire scupper area, with a mat of rebars equivalent in size and spacing to normal bottom mat pattern of deck. This may require the lowering of the deck in this area.
3. Fabricator may select either hole pattern - rectangular or circular.

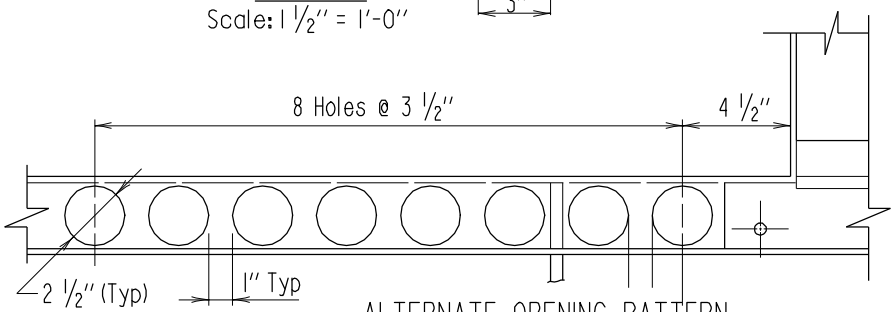

ALTERNATE OPENING PATTERN TO ALLOW CONCRETE TO INTRUDE

Scale: 1 1/2" = 1'-0"

APPROVAL
DIRECTOR OFFICE OF STRUCTURES
DATE: 7/25/77

REVISIONS	
SHA	FHWA
10-27-92	.
5-20-94	.
7-15-94	.
1-22-01	.

FHWA APPROVAL
DATE: 6-8-90

STATE OF MARYLAND
DEPARTMENT OF TRANSPORTATION
STATE HIGHWAY ADMINISTRATION
OFFICE OF STRUCTURES

TYPE I BRIDGE SCUPPER

STANDARD NO. BR-SS(0.03)-80-112

SHEET 2 OF 4

SUPER-OTHER

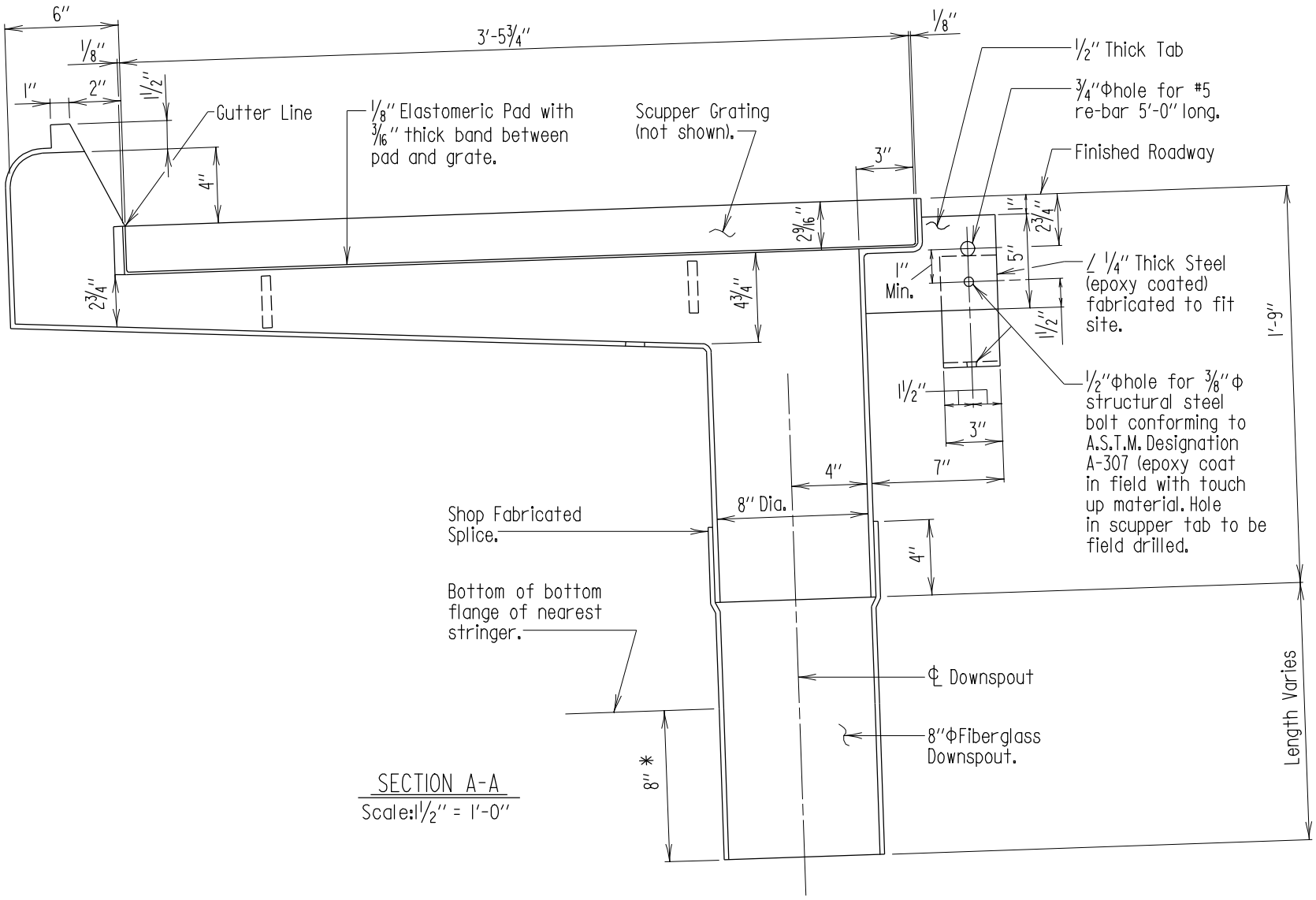

APPROVAL

E. S. Freudenberger DIRECTOR
OFFICE OF STRUCTURES
DATE: 7/25/80

REVISIONS

SHA	FHWA
8-24-81	6-8-90
5-31-83	6-8-90
1-7-93	.
.	.

FHWA APPROVAL
DATE: 6-8-90

STATE OF MARYLAND
DEPARTMENT OF TRANSPORTATION
STATE HIGHWAY ADMINISTRATION
OFFICE OF STRUCTURES

TYPE I BRIDGE SCUPPER

STANDARD NO. BR-SS(0.03)-80-112

SHEET 3 OF 4

SUPER - OTHER

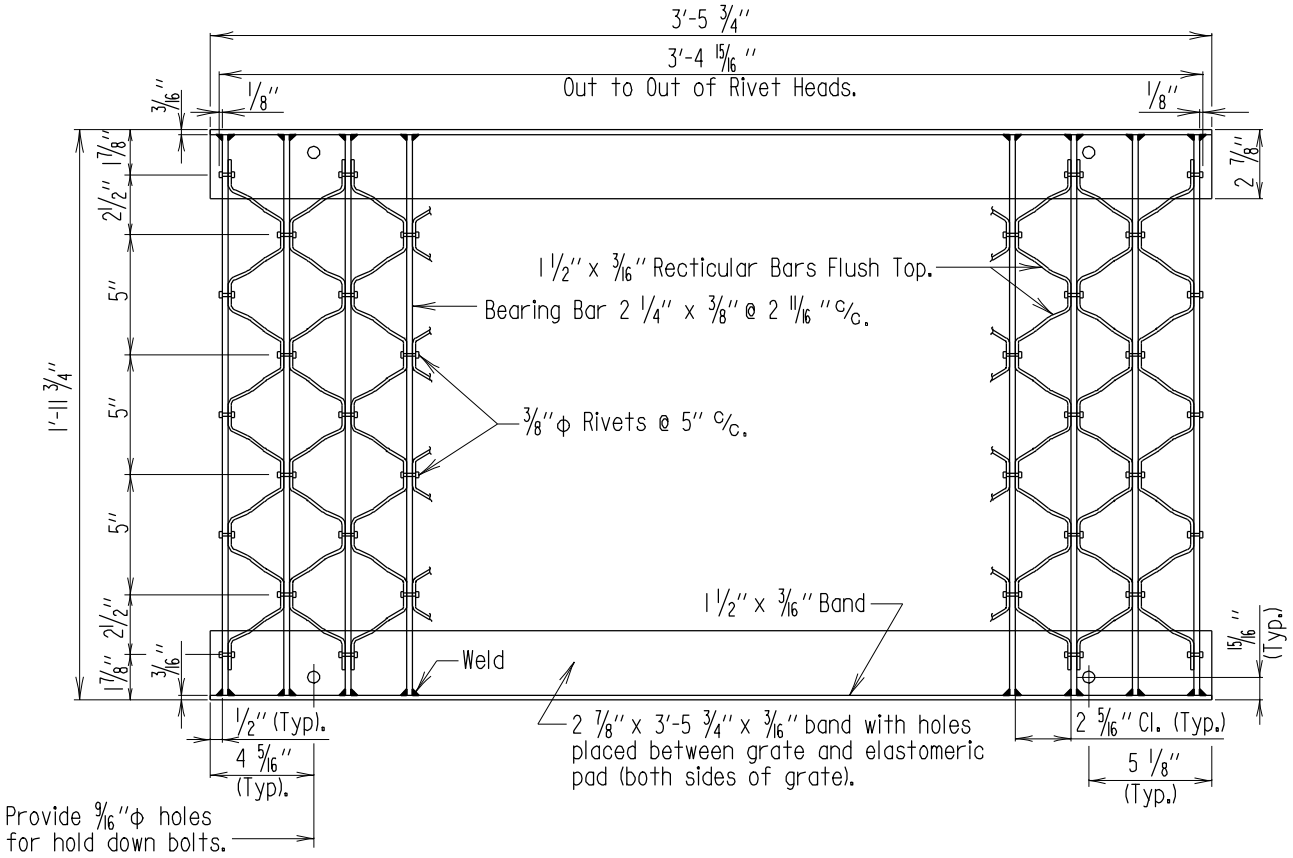

PLAN - SCUPPER GRATING

Scale: 1 1/2" = 1'-0"

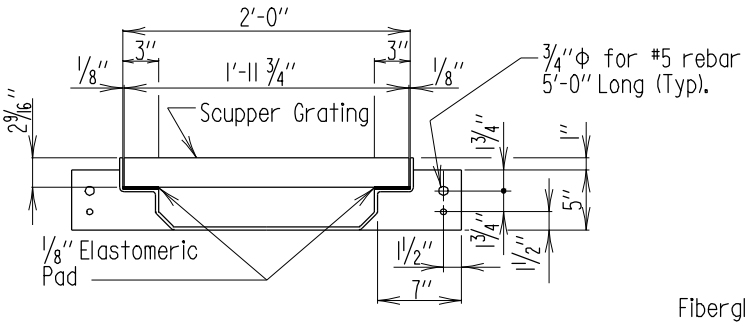

SECTION B-B

Scale: 3/4" = 1'-0"

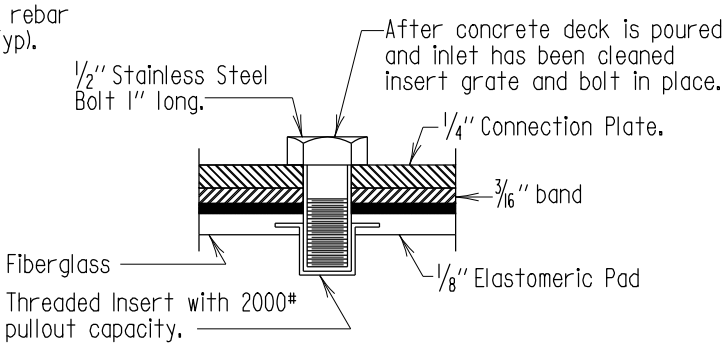

DETAIL "A"

Scale: None

APPROVAL		
R.S. Freedman DIRECTOR OFFICE OF STRUCTURES DATE: 7/25/80		
REVISIONS		
	SHA	FHWA
	11-10-81	6-8-90
	6-1-83	6-8-90
FHWA APPROVAL	1-7-93	·
DATE: 6-8-90	1-22-01	·

STATE OF MARYLAND
DEPARTMENT OF TRANSPORTATION
STATE HIGHWAY ADMINISTRATION
OFFICE OF STRUCTURES

TYPE I BRIDGE SCUPPER

STANDARD NO. BR-SS(0.03)-80-112 SHEET 4 OF 4

SUPER - OTHER

GENERAL NOTES

Specifications: Latest S.H.A. Specifications and Special Provisions for materials and construction. Latest AASHTO Standard Specifications for Highway Bridges for design.

Materials: Scuppers shall be grey cast iron, conforming to ASTM A 48 Class 30 B.

Gratings shall be structural steel conforming to ASTM A 709 Grade 36 and epoxy coated.

Stainless steel bolts shall conform to ASTM A 193, Identification Symbol B8, Type 304.

Paint: Scuppers shall be painted with one shop coat inside and outside. Shop paint shall conform to 912.02.01. Insides of scuppers to be painted with one coat of coal tar epoxy SSPC-Paint 16. Vertical showing surface in curb face and horizontal showing surface in roadway to be painted with the second and finish coats specified in 912.16, System E. Outside of scuppers exposed to atmosphere below the concrete deck slab, shall receive the field paint required for structural steel. If there is no paint indicated, the scupper shall be painted to match color of existing beam.

Shipping: Grate and Scupper shall be shipped as unit with grate hold down bolts in place (not welded).

Measurement and Payment: The furnishing, fabricating, erecting, etc. of all new scuppers for the bridge will be measured and paid for at the Contract unit price per each for the Scupper item regardless of length of downspouts, etc. If no specific items appear in the Invitation for Bids, the cost shall be included in the pertinent Superstructure Concrete item.

APPROVAL	
E.S. Freeman DIRECTOR OFFICE OF STRUCTURES DATE: 8/24/81	
REVISIONS	
SHA	FHWA
7-18-83	6-8-90
11-12-87	6-8-90
12-27-93	·
1-22-01	·

FHWA APPROVAL
DATE: 6-8-90

STATE OF MARYLAND
DEPARTMENT OF TRANSPORTATION
STATE HIGHWAY ADMINISTRATION
OFFICE OF STRUCTURES

TYPE IA BRIDGE SCUPPER

STANDARD NO. BR-SS(0.04)-81-130 SHEET 1 OF 4

SUPER-OTHER

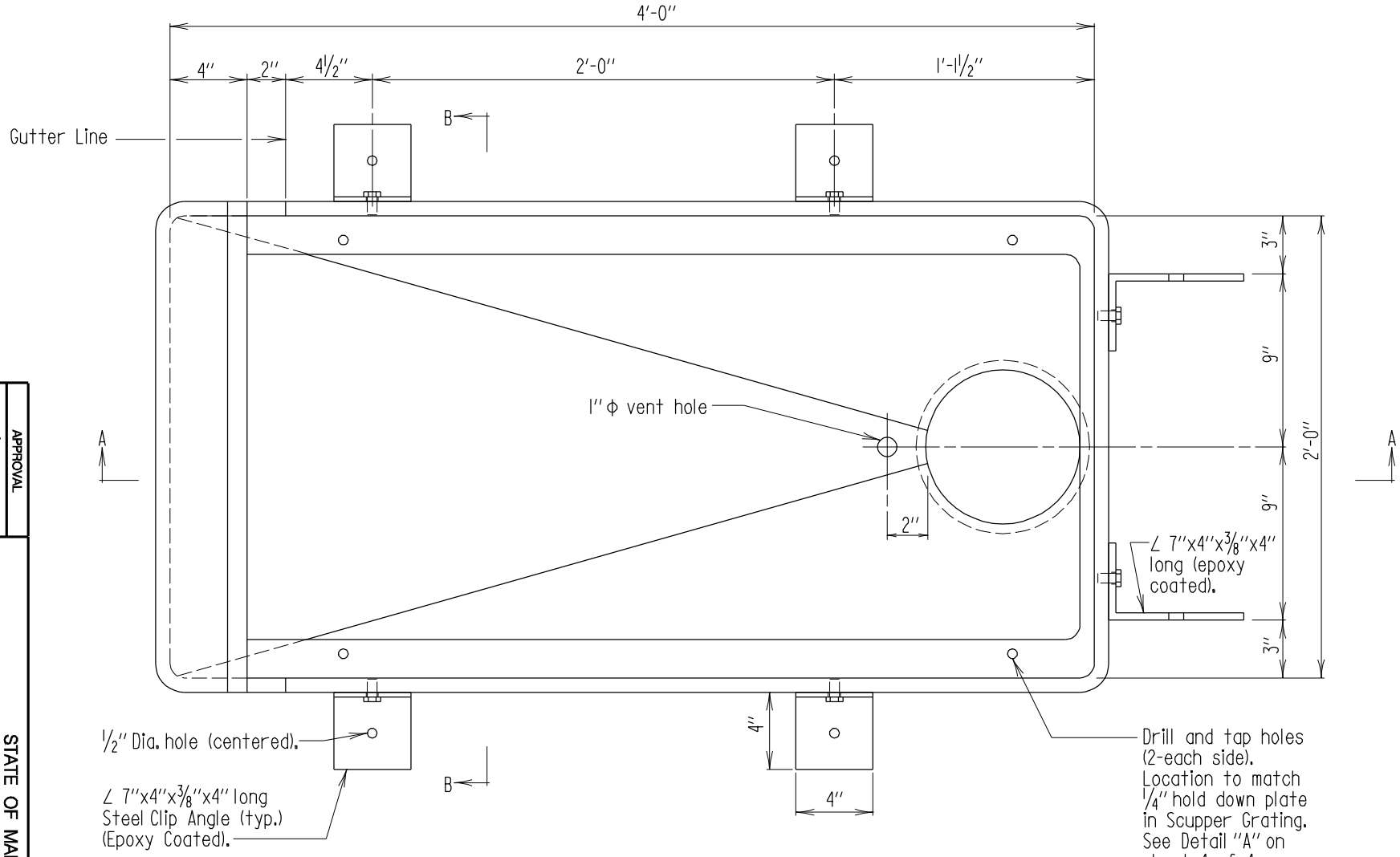

PLAN

Scale: 1 1/2" = 1'-0"

Note:

1. Wood forms may be used in the area of the scupper, as approved by the Engineer.
2. There must be a minimum of 5" of concrete under entire scupper area, with a mat of rebars equivalent in size and spacing to normal bottom mat pattern of deck. This may require the lowering of the deck in this area.

APPROVAL

DIRECTOR OFFICE OF STRUCTURES

DATE: 8/24/81

REVISIONS

SHA	FHWA
7-1-83	6-8-90
1-7-93	.
5-20-94	.
1-22-01	.

FHWA APPROVAL

DATE: 6-8-90

STATE OF MARYLAND
DEPARTMENT OF TRANSPORTATION
STATE HIGHWAY ADMINISTRATION
OFFICE OF STRUCTURES

TYPE IA BRIDGE SCUPPER

STANDARD NO. BR-SS(0.04)-81-130

SHEET 2 OF 4

SUPER-OTHER

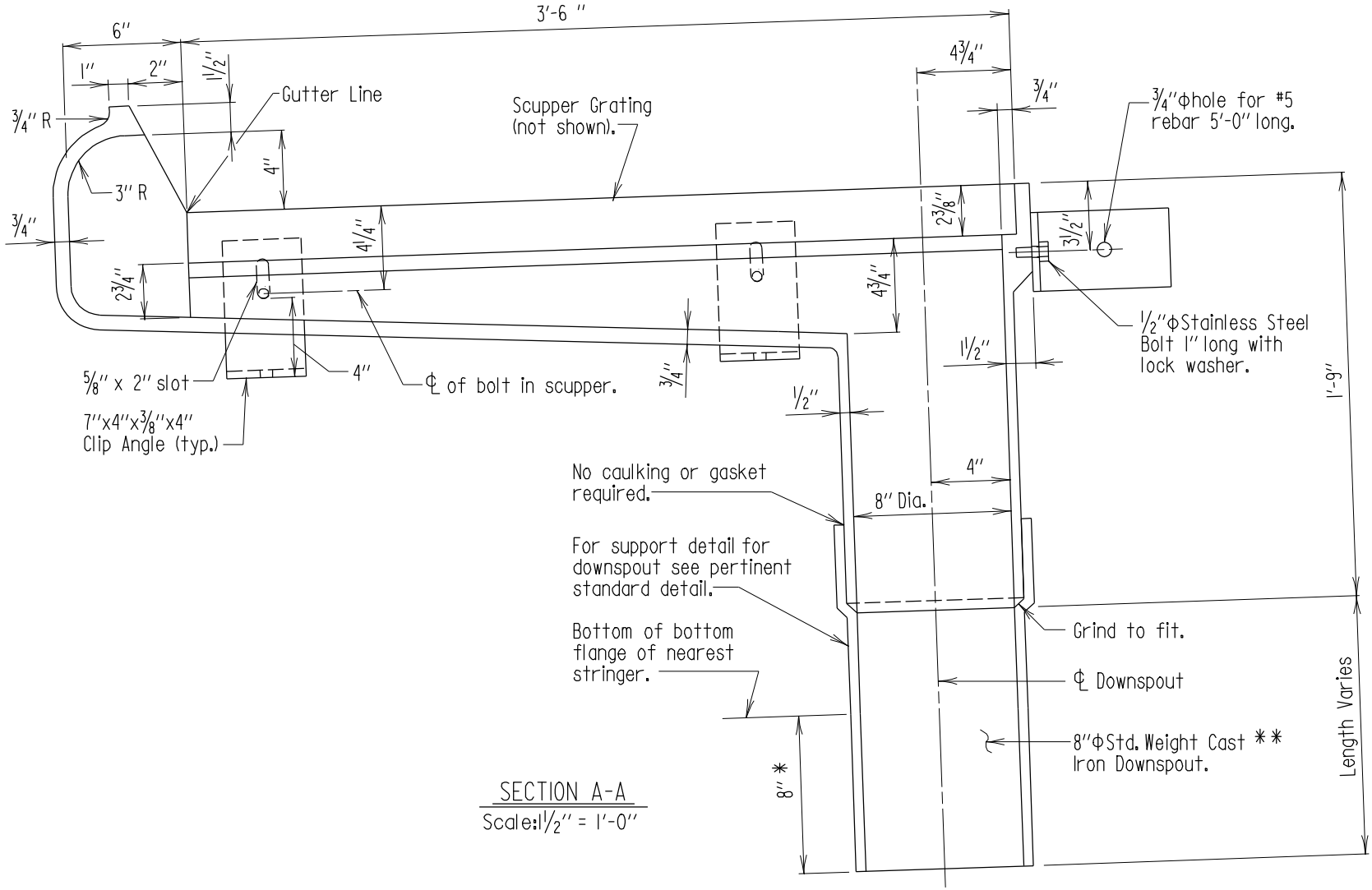

SECTION A-A

Scale: 1 1/2" = 1'-0"

* Provided it does not interfere with minimum underclearance over roadway and/or shoulder.

** The downspout may be fiberglass. Color shall match finished bridge paint color. No additional compensation will be allowed for whichever option is chosen.

APPROVAL
DIRECTOR OFFICE OF STRUCTURES
DATE: 8/24/81

REVISIONS	
SHA	1-7-93
FHWA	5-12-93
	1-22-01
	7-14-08

FHWA APPROVAL
DATE: 6-8-90

STATE OF MARYLAND
DEPARTMENT OF TRANSPORTATION
STATE HIGHWAY ADMINISTRATION
OFFICE OF STRUCTURES

TYPE IA BRIDGE SCUPPER

STANDARD NO. BR-SS(0.04)-81-130

SHEET 3 OF 4

SUPER-OTHER

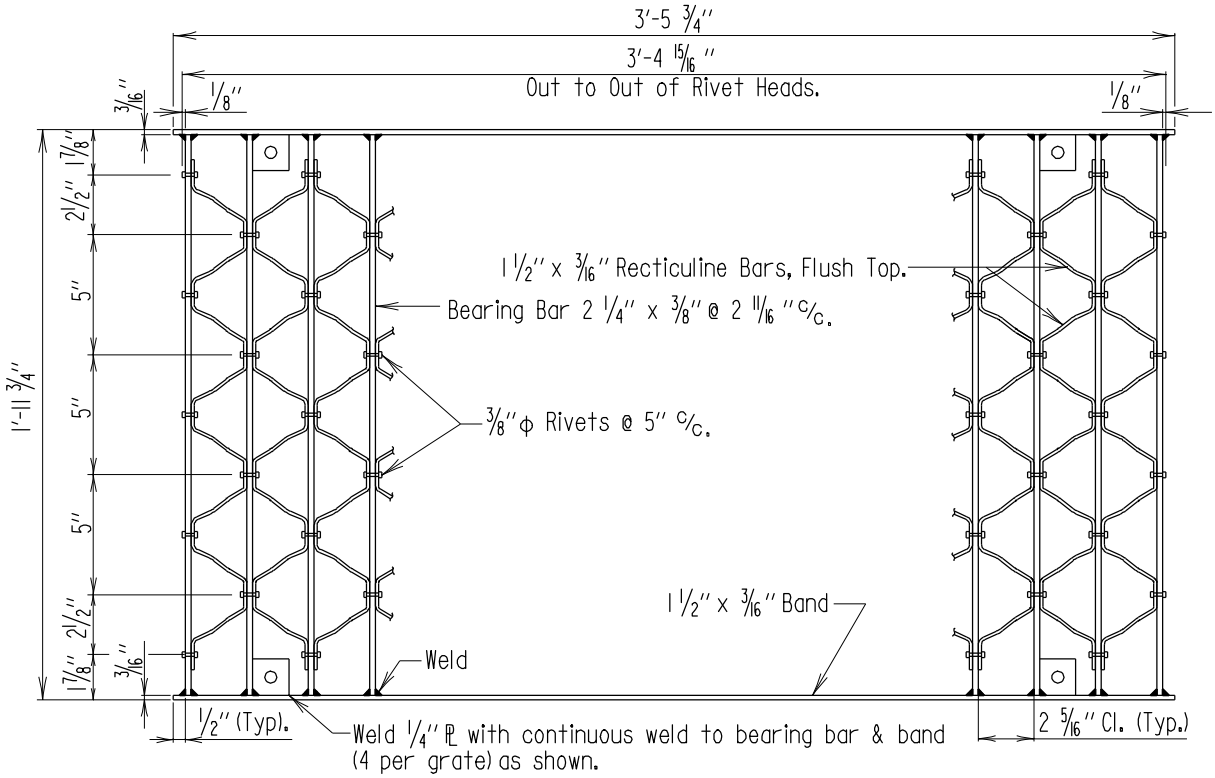

PLAN - SCUPPER GRATING

Scale: 1 1/2" = 1'-0"

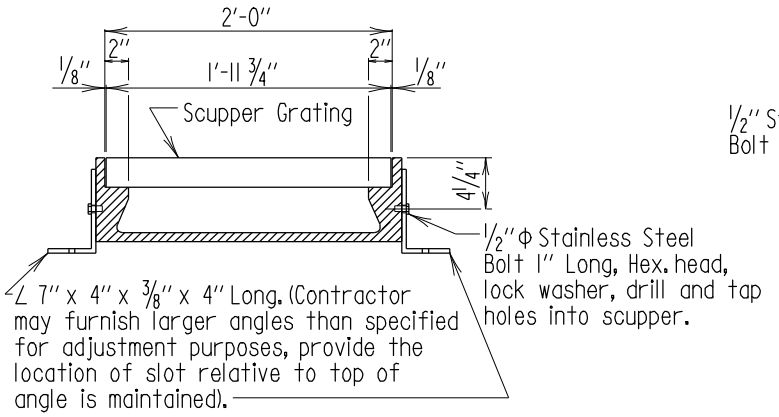

SECTION B-B

Scale: 3/4" = 1'-0"

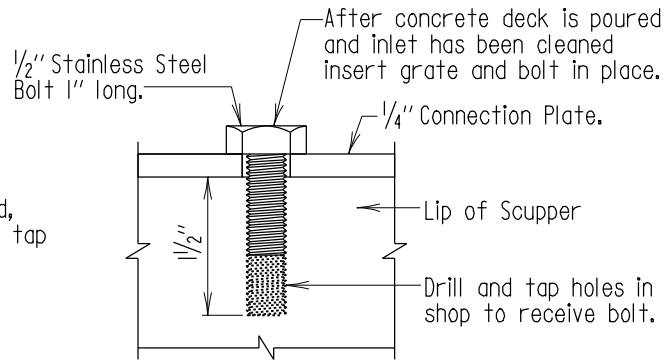

DETAIL "A"

Scale: None

APPROVAL	
E.S. Freedman DIRECTOR OFFICE OF STRUCTURES	
DATE: 8/24/81	
REVISIONS	
SHA	FHWA
2-3-83	6-8-90
1-7-93	·
·	·
·	·

FHWA APPROVAL
DATE: 6-8-90

STATE OF MARYLAND
DEPARTMENT OF TRANSPORTATION
STATE HIGHWAY ADMINISTRATION
OFFICE OF STRUCTURES

TYPE IA BRIDGE SCUPPER

STANDARD NO. BR-SS(0.04)-81-130 SHEET 4 OF 4

SUPER-OTHER

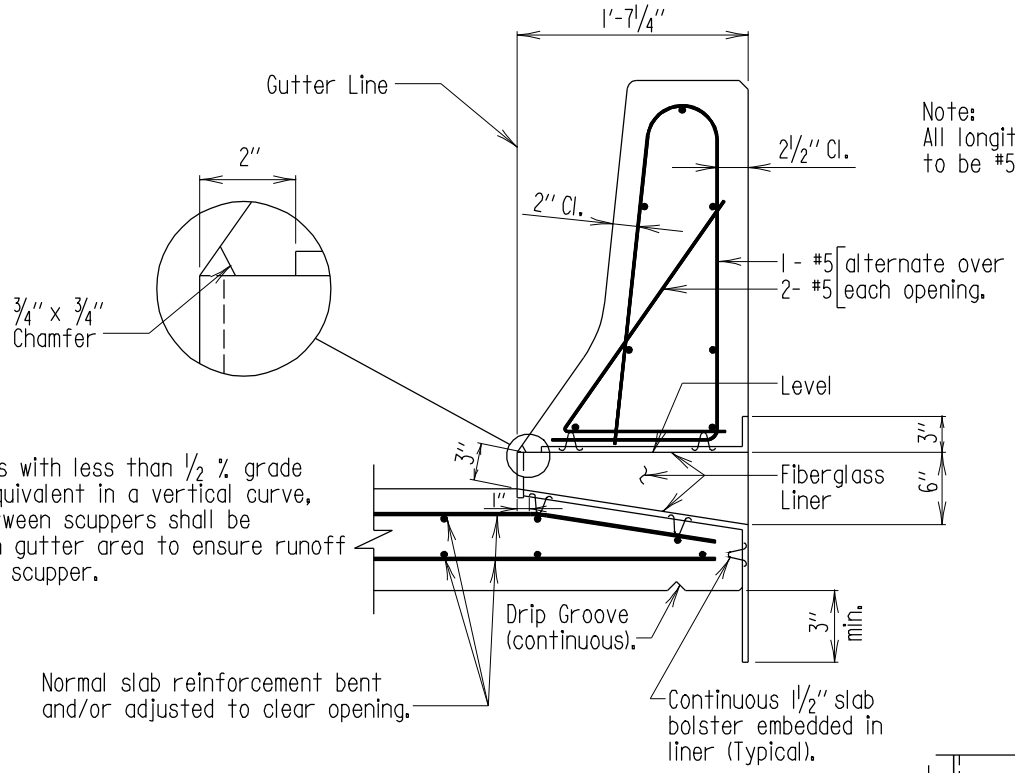

Note:
All longitudinal steel in parapet to be #5's spaced as shown.

Note:
On bridges with less than 1/2 % grade or the equivalent in a vertical curve, areas between scuppers shall be slopped in gutter area to ensure runoff will reach scupper.

Note:
Stringers and railing not shown.

SECTION A-A
Scale: 3/4" = 1'-0"

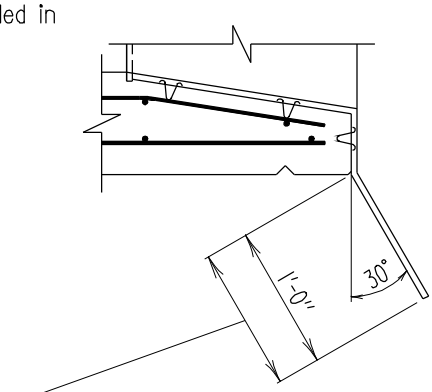

Whenever exterior stringers are greater than 3'-0" deep, scuppers are to be modified and fabricated with this lip.

Other Related Standards
BR-SS(6.02)-75-27
REBAR-PL(9.02)-91-220
REBAR-PL(9.03)-91-236
REBAR-PL(9.02)-91-221
REBAR-BD(9.03)-91-237

Notes:
1. Fiberglass lining shall extend 3" beyond sides and top of opening on exterior face of parapet and 3" min. below bottom of slab on exterior face of parapet. Slab bolsters shall have upturned feet embedded in the fiberglass.
2. Omit openings in panels 10' each side of piers and abutments and in those sections which carry light posts support brackets. Normal parapet and sidewalk reinforcing shall be provided in all sections without openings.
3. Fiberglass shall conform to 921.11. The surface of the fiberglass designed to bond with other materials shall be free of bond inhibiting agents.

APPROVAL
R.S. Friedman DIRECTOR OFFICE OF STRUCTURES
DATE: 3/3/83

REVISIONS	
SHA	FHWA
8-1-94	·
1-6-95	·
7-24-01	·
1-22-01	·

FHWA APPROVAL
DATE: 6-8-90

STATE OF MARYLAND
DEPARTMENT OF TRANSPORTATION
STATE HIGHWAY ADMINISTRATION
OFFICE OF STRUCTURES

TYPE II BRIDGE SCUPPER

STANDARD NO. BR-SS(0.05)-83-142 SHEET 1 OF 2

SUPER-OTHER

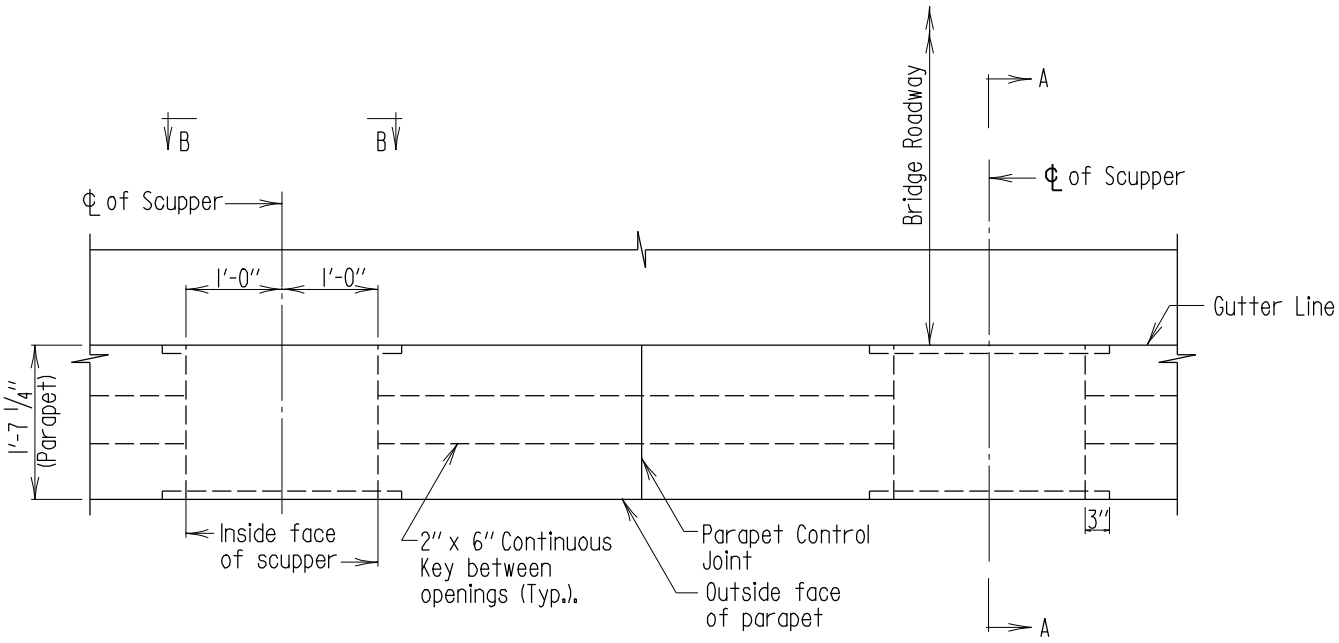

PLAN

Scale: 1/2" = 1'-0"

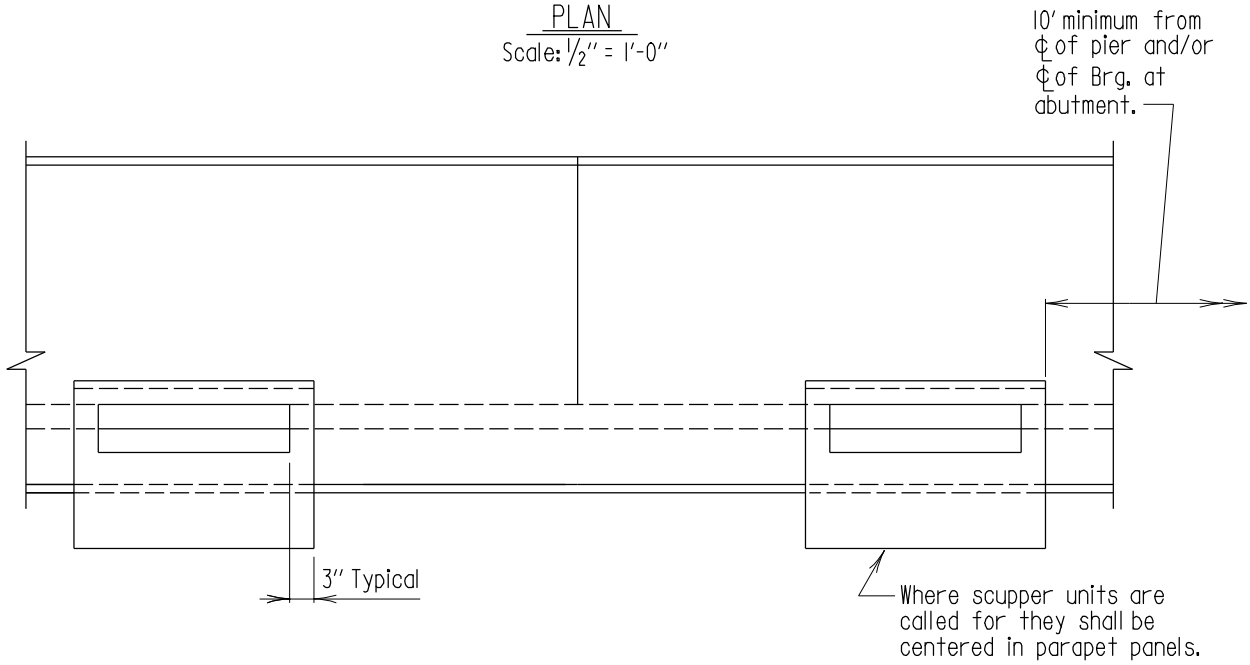

EXTERIOR ELEVATION

Scale: 1/2" = 1'-0"

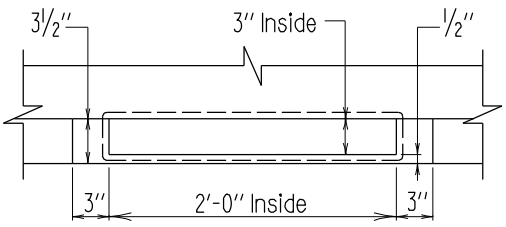

VIEW B-B

Scale: 1/2" = 1'-0"

APPROVAL	
E.S. Friedman DIRECTOR OFFICE OF STRUCTURES	
DATE: 3/3/83	
REVISIONS	
SHA	FHWA
10-27-92	·
1-8-93	·
8-1-94	·
1-6-95	·

FHWA APPROVAL	
DATE: 11-29-85	

STATE OF MARYLAND
DEPARTMENT OF TRANSPORTATION
STATE HIGHWAY ADMINISTRATION
OFFICE OF STRUCTURES

TYPE II BRIDGE SCUPPER

STANDARD NO. BR-SS(0.05)-83-142

SHEET 2 OF 2

SUPER-OTHER

Note:
Railing not shown.

Note:
On bridges with less than 1/2 % grade or the equivalent in a vertical curve, areas between scuppers shall be slopped in gutter area to ensure runoff will reach scupper.

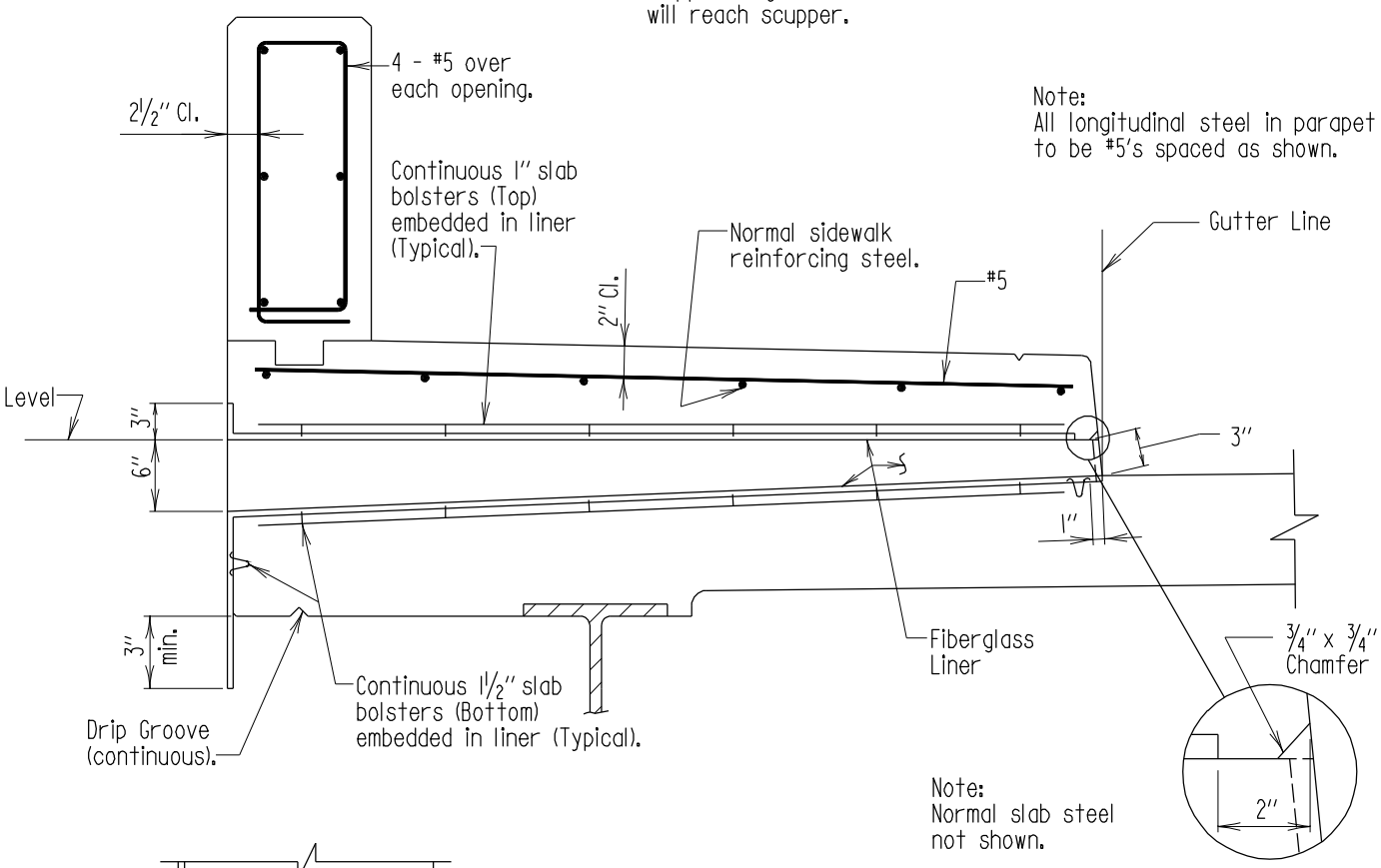

Note:
All longitudinal steel in parapet to be #5's spaced as shown.

Note:
Normal slab steel not shown.

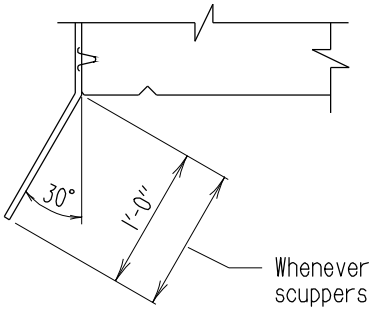

SECTION A-A
Scale: 3/4" = 1'-0"

Other Related Standards
REBAR-PL(3.02)-91-232
REBAR-PL(3.03)-91-233
REBAR-BD(3.02)-91-233
REBAR-BD(3.03)-91-239

Whenever exterior stringers are greater than 3'-0" deep, scuppers are to be modified and fabricated with this lip.

Notes:
1. Fiberglass lining shall extend 3" beyond sides and top of opening on exterior face of parapet and 3" min. below bottom of slab on exterior face of parapet. Slab bolsters shall have upturned feet embedded in the fiberglass.
2. Omit openings in panels 10' each side of piers and abutments and in those sections which carry light posts support brackets. Normal parapet and sidewalk reinforcing shall be provided in all sections without openings.
3. Fiberglass shall conform to 921.11. The surface of the fiberglass designed to bond with other materials shall be free of bond inhibiting agents.

APPROVAL	
E.S. Freedman DIRECTOR OFFICE OF STRUCTURES	
DATE: 4/19/83	
REVISIONS	
SHA	FHWA
10-27-92	·
8-1-94	·
1-22-01	·
6-13-01	·

FHWA APPROVAL
DATE: 6-8-90

STATE OF MARYLAND
DEPARTMENT OF TRANSPORTATION
STATE HIGHWAY ADMINISTRATION
OFFICE OF STRUCTURES

TYPE III BRIDGE SCUPPER

STANDARD NO. BR-SS(0.06)-83-144 SHEET 1 OF 2

SUPER-OTHER

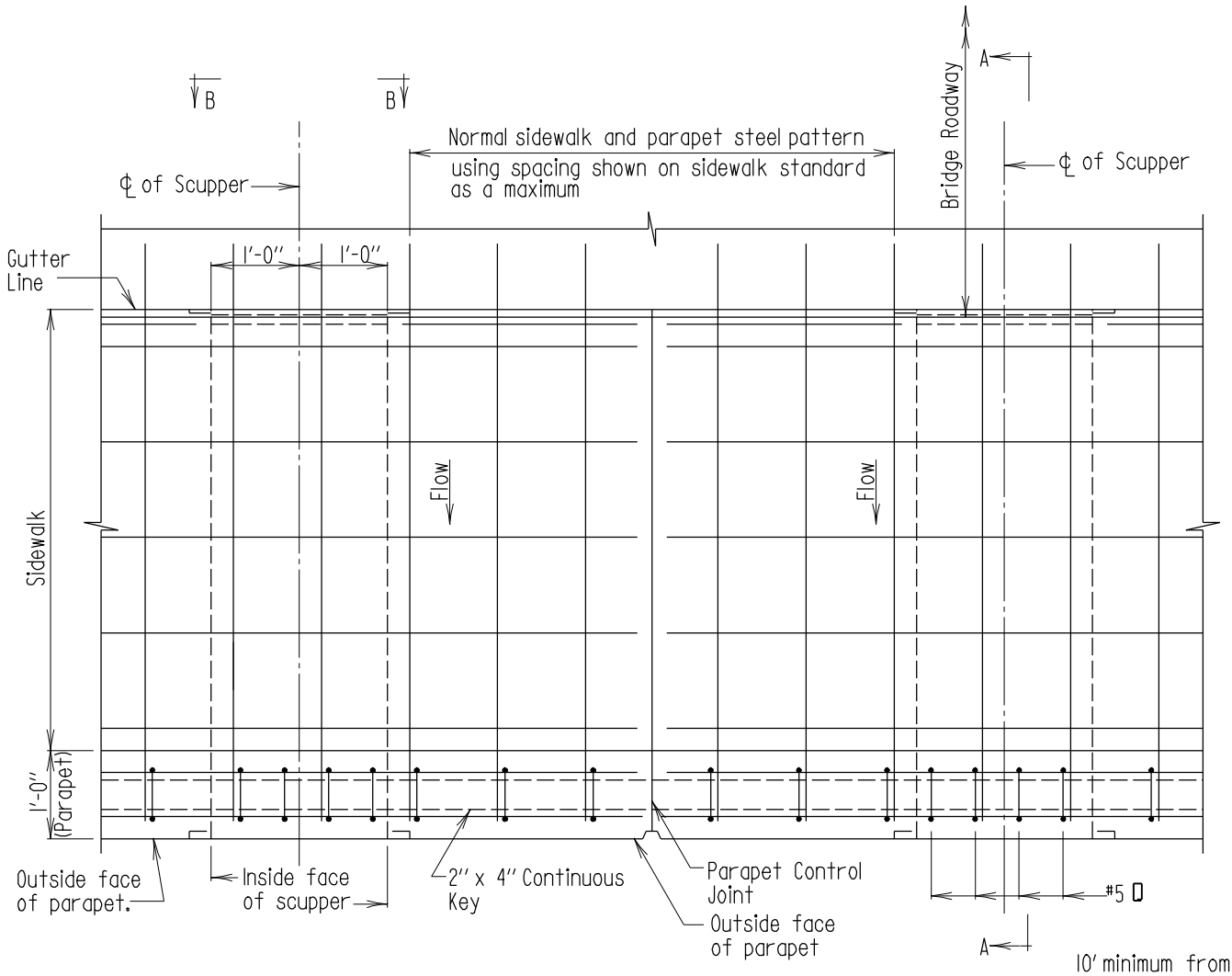

PLAN

Scale: 1/2" = 1'-0"

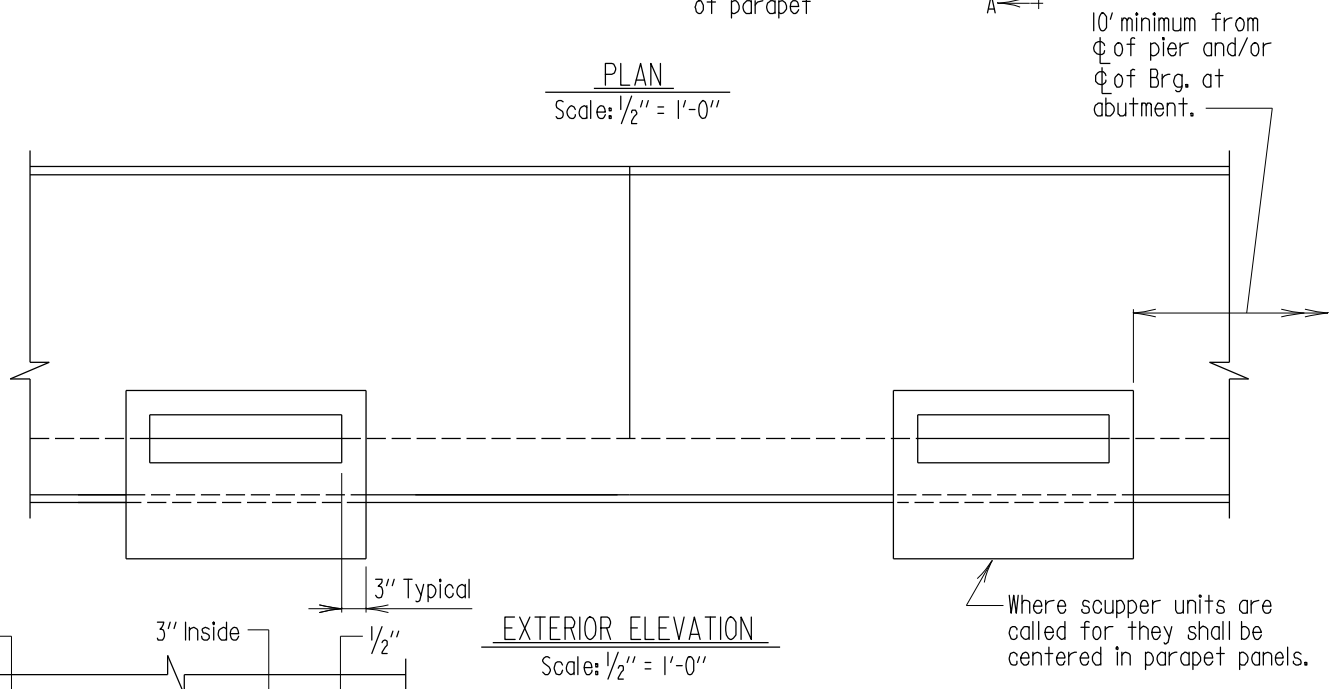

EXTERIOR ELEVATION

Scale: 1/2" = 1'-0"

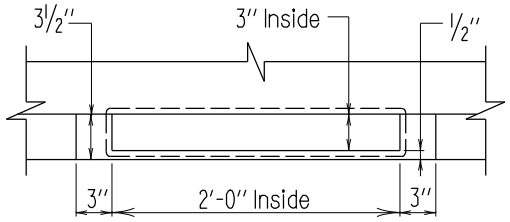

VIEW B-B

Scale: 1/2" = 1'-0"

APPROVAL	
E.S. Freedman DIRECTOR OFFICE OF STRUCTURES	
DATE: 4/19/83	
REVISIONS	
SHA	FHWA
10-27-92	·
1-8-93	·
8-1-94	·
·	·

FHWA APPROVAL
DATE: 11-29-85

STATE OF MARYLAND
DEPARTMENT OF TRANSPORTATION
STATE HIGHWAY ADMINISTRATION
OFFICE OF STRUCTURES

TYPE III BRIDGE SCUPPER

STANDARD NO. BR-SS(0.06)-83-144 SHEET 2 OF 2

SUPER-OTHER

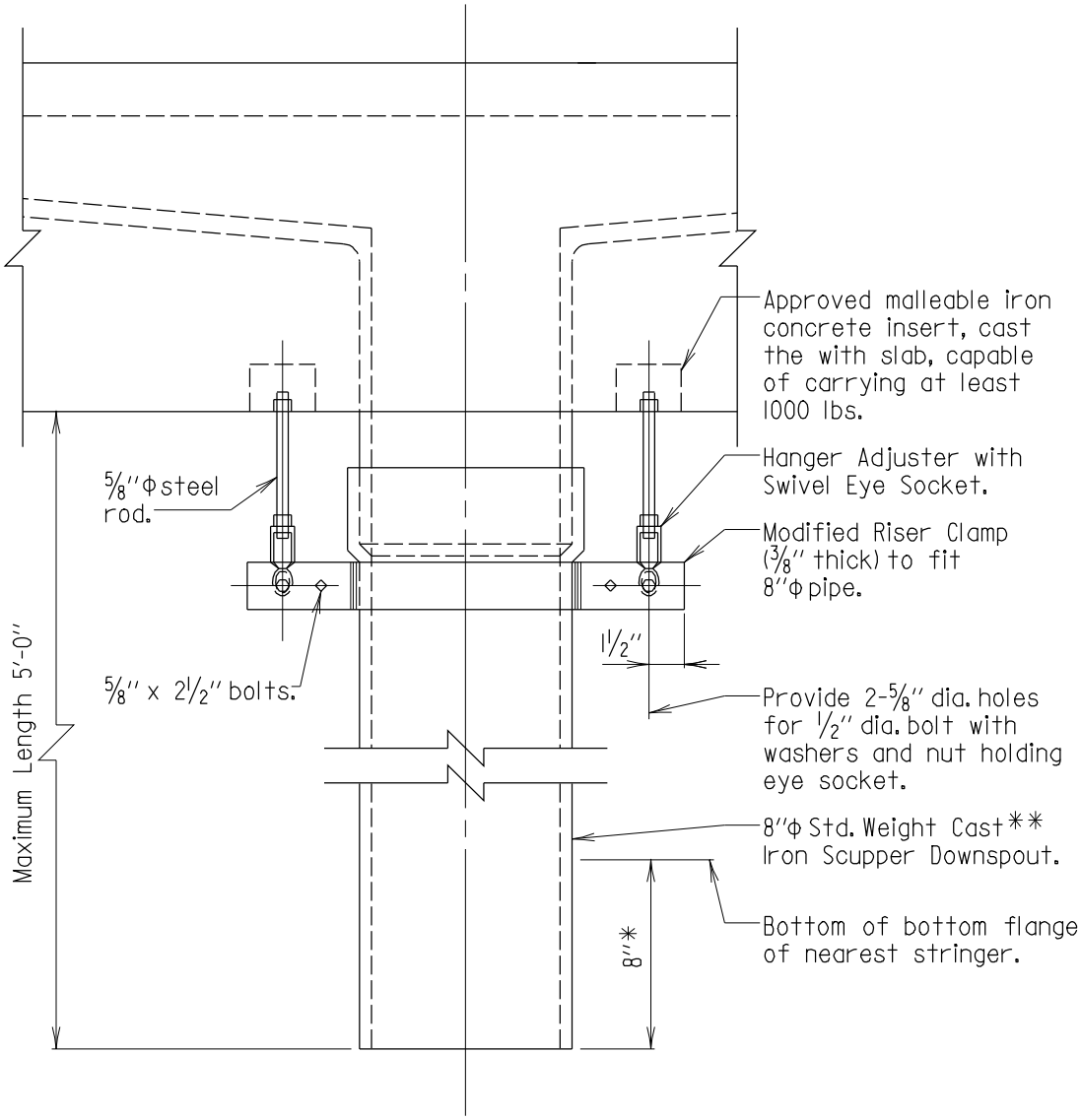

ELEVATION
Scale: 1 1/2" = 1'-0"

* Provided it does not interfere with minimum underclearance over roadway and/or shoulder.

** The downspout may be fiberglass. Color shall match finished bridge paint color. No additional compensation will be allowed for whichever option is chosen.

Notes:

1. All exposed material, except cast iron scupper downspout to be epoxy coated in conformance with Section 465.
2. Exposed portions of cast iron scupper downspout to be coated with coal tar epoxy conforming to Specification SSPC-16.

APPROVAL	
R. S. Freedman DIRECTOR OFFICE OF STRUCTURES	
DATE: 4/18/83	
REVISIONS	
SHA	FHWA
5-12-93	·
9-24-96	·
1-22-01	·
7-14-08	·

FHWA APPROVAL	
DATE: 11-29-85	

STATE OF MARYLAND
DEPARTMENT OF TRANSPORTATION
STATE HIGHWAY ADMINISTRATION
OFFICE OF STRUCTURES

SCUPPER DOWNSPOUT SUPPORT BRACKET
FOR SHORT CAST IRON SCUPPER DOWNSPOUT

STANDARD NO. BR-SS(0.07)-83-145 SHEET 1 OF 1

SUPER-OTHER

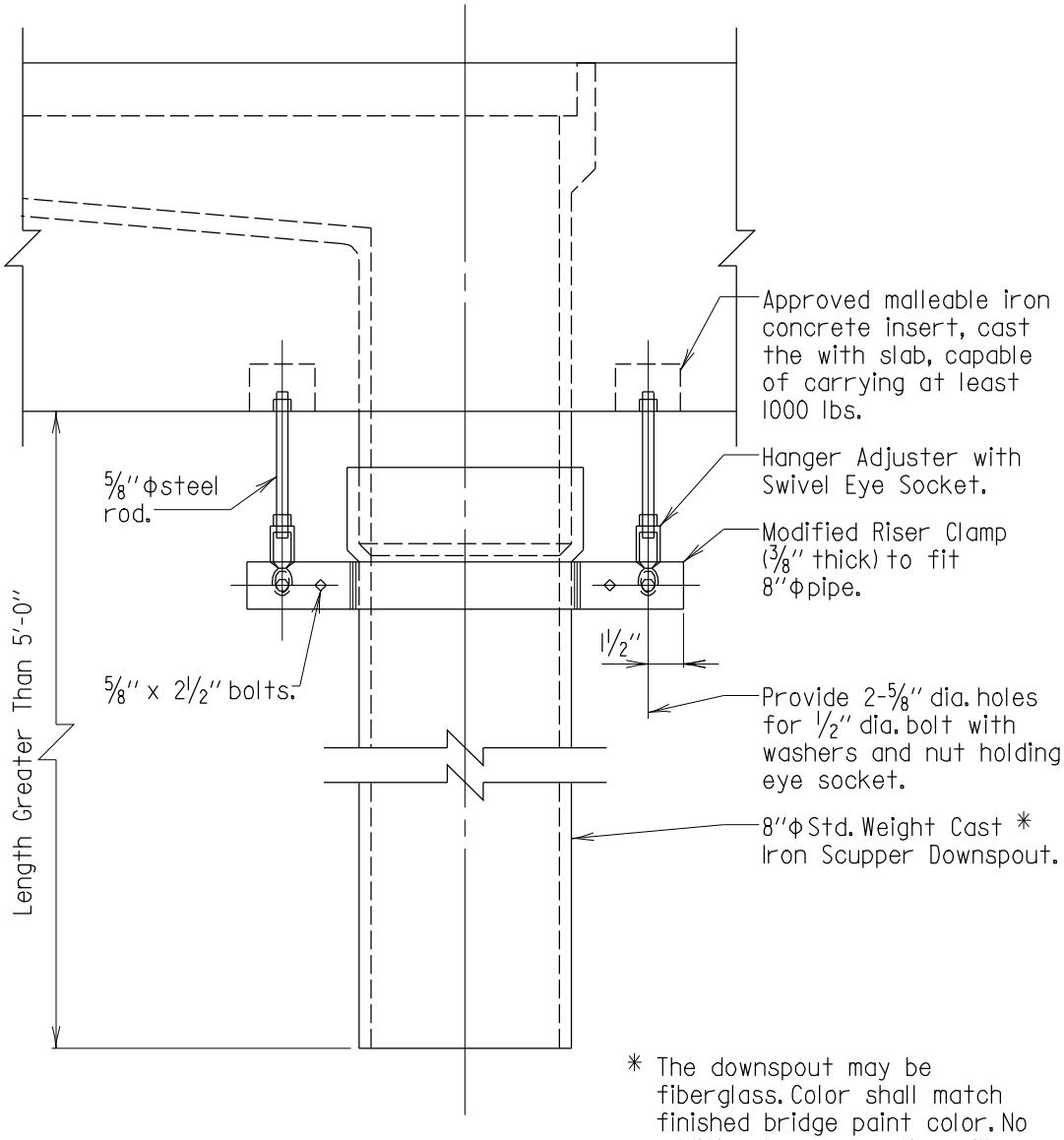

* The downspout may be fiberglass. Color shall match finished bridge paint color. No additional compensation will be allowed for whichever option is chosen.

ELEVATION

Scale: 1 1/2" = 1'-0"

Notes:

1. All exposed material, except cast iron scupper downspout to be epoxy coated in conformance with Section 465.
2. Exposed portions of cast iron scupper downspout to be coated with coal tar epoxy conforming to Specification SSPC-16.

APPROVAL	
R. S. Freedman DIRECTOR OFFICE OF STRUCTURES	
DATE: 2/12/90	
REVISIONS	
SHA	FHWA
5-12-93	·
1-22-01	·
7-14-08	·
·	·

FHWA APPROVAL
DATE: .

STATE OF MARYLAND
DEPARTMENT OF TRANSPORTATION
STATE HIGHWAY ADMINISTRATION
OFFICE OF STRUCTURES

SCUPPER DOWNSPOUT SUPPORT BRACKET FOR LONG CAST IRON SCUPPER DOWNSPOUT

STANDARD NO. BR-SS(0.08)-83-146 SHEET 1 OF 2

SUPER-OTHER

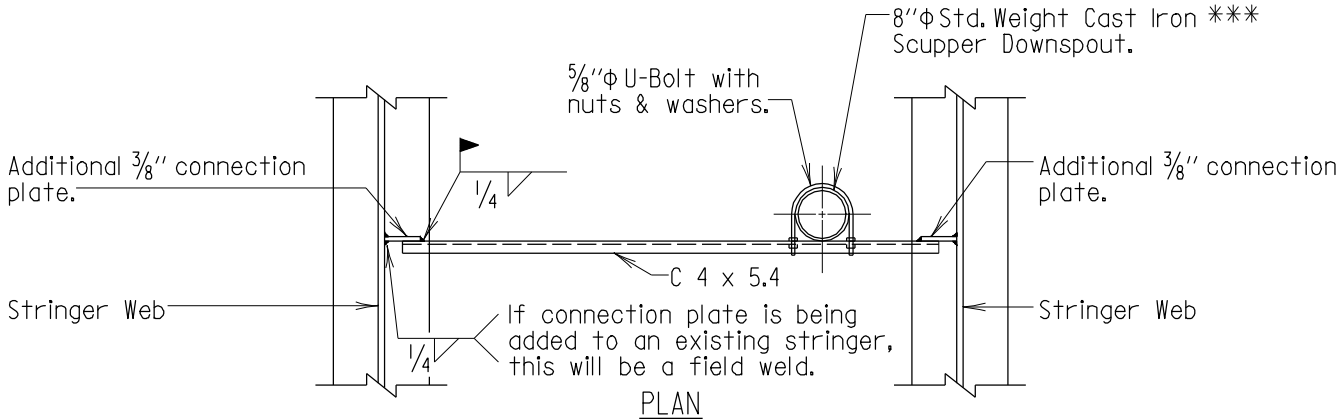

PLAN

(NO PROPOSED STIFFENER AVAILABLE IN SCUPPER AREA)

Scale: 3/8" =1'-0"

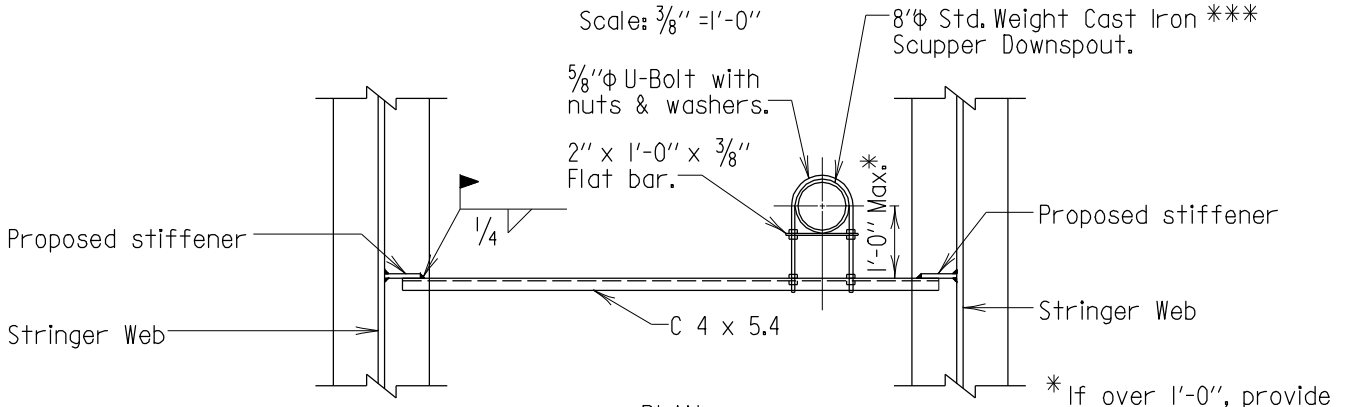

* If over 1'-0", provide detail as shown above.

PLAN

(PROPOSED STIFFENER AVAILABLE IN SCUPPER AREA)

Scale: 3/8" =1'-0"

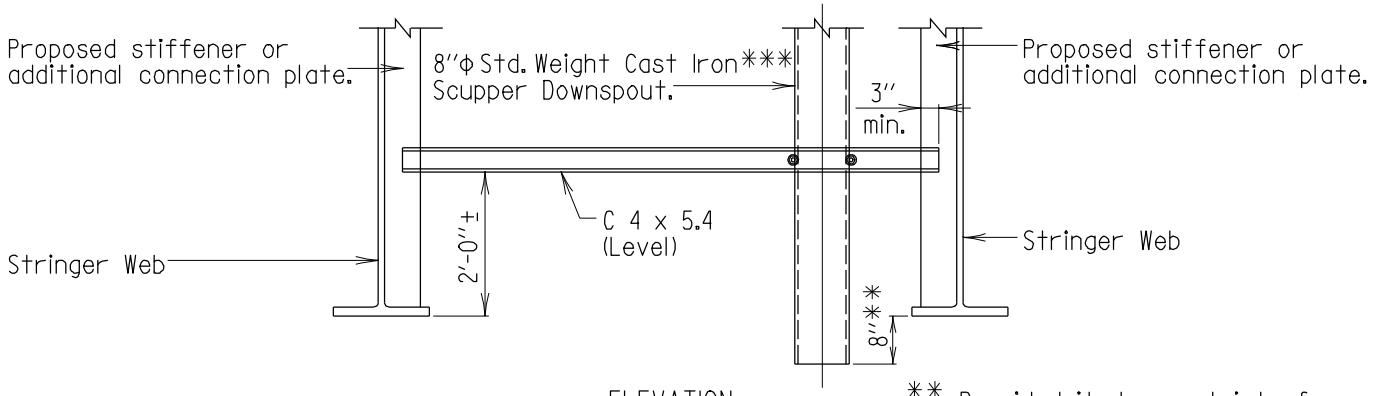

ELEVATION

Scale: 3/8" =1'-0"

** Provided it does not interfere with minimum underclearance over roadway and/or shoulder.

*** The downspout may be fiberglass. Color shall match finished bridge paint color. No additional compensation will be allowed for whichever option is chosen.

Notes:

1. U bolts, nuts, washers, bars, channels, etc. shall receive the same number of coats and same color field paint as required for structural steel. If weathering steel is specified it need not be painted.
2. Exposed portions of cast iron scupper downspout to be coated with coal tar epoxy conforming to Specification SSPC-16.

APPROVAL
R.S. Friedman DIRECTOR OFFICE OF STRUCTURES
DATE: 5/2/83

REVISIONS	
SHA	FHWA
5-12-93	·
1-22-01	·
12-17-01	·
7-14-08	·

FHWA APPROVAL
DATE: 6-8-90

STATE OF MARYLAND
DEPARTMENT OF TRANSPORTATION
STATE HIGHWAY ADMINISTRATION
OFFICE OF STRUCTURES

ADDITIONAL SCUPPER DOWNSPOUT SUPPORT BRACKET FOR LONG CAST IRON SCUPPER DOWNSPOUT

STANDARD NO. BR-SS(0.08)-83-146 SHEET 2 OF 2

SUPER-OTHER

GENERAL NOTES

Specifications: Latest S.H.A. Specifications and Special Provisions for materials and construction. Latest AASHTO Standard Specifications for Highway Bridges for design.

Materials: Scuppers shall be grey cast iron, conforming to ASTM A 48 Class 30 B.

Gratings shall be structural steel conforming to ASTM A 709 Grade 36 and epoxy coated.

Stainless steel bolts shall conform to ASTM A 193, Identification Symbol B8, Type 304.

Paint: Scuppers shall be painted with one shop coat inside and outside. Shop paint shall conform to 912.02.01. Insides of scuppers to be painted with one coat of coal tar epoxy SSPC-Paint 16. Vertical showing surface in curb face and horizontal showing surface in roadway to be painted with the second and finish coats specified in 912.16, System E. Outside of scuppers exposed to atmosphere below the concrete deck slab, shall receive the field paint required for structural steel. If there is no paint indicated, the scupper shall be painted to match color of existing beam.

Shipping: Grate and Scupper shall be shipped as unit with grate hold down bolts in place (not welded).

Measurement and Payment: The furnishing, fabricating, erecting, etc. of all new scuppers for the bridge will be measured and paid for at the Contract unit price per each for the Scupper item regardless of length of downspouts, etc. If no specific items appear in the Invitation for Bids, the cost shall be included in the pertinent Superstructure Concrete item.

APPROVAL	
R.S. Freedman DIRECTOR OFFICE OF STRUCTURES DATE: 7/1/83	
REVISIONS	
SHA	FHWA
12-27-93	·
1-22-01	·
·	·
·	·

FHWA APPROVAL
DATE: 10-6-83

STATE OF MARYLAND
DEPARTMENT OF TRANSPORTATION
STATE HIGHWAY ADMINISTRATION
OFFICE OF STRUCTURES

TYPE IV BRIDGE SCUPPER

STANDARD NO. BR-SS(0.10)-83-148 SHEET 1 OF 4

SUPER-OTHER

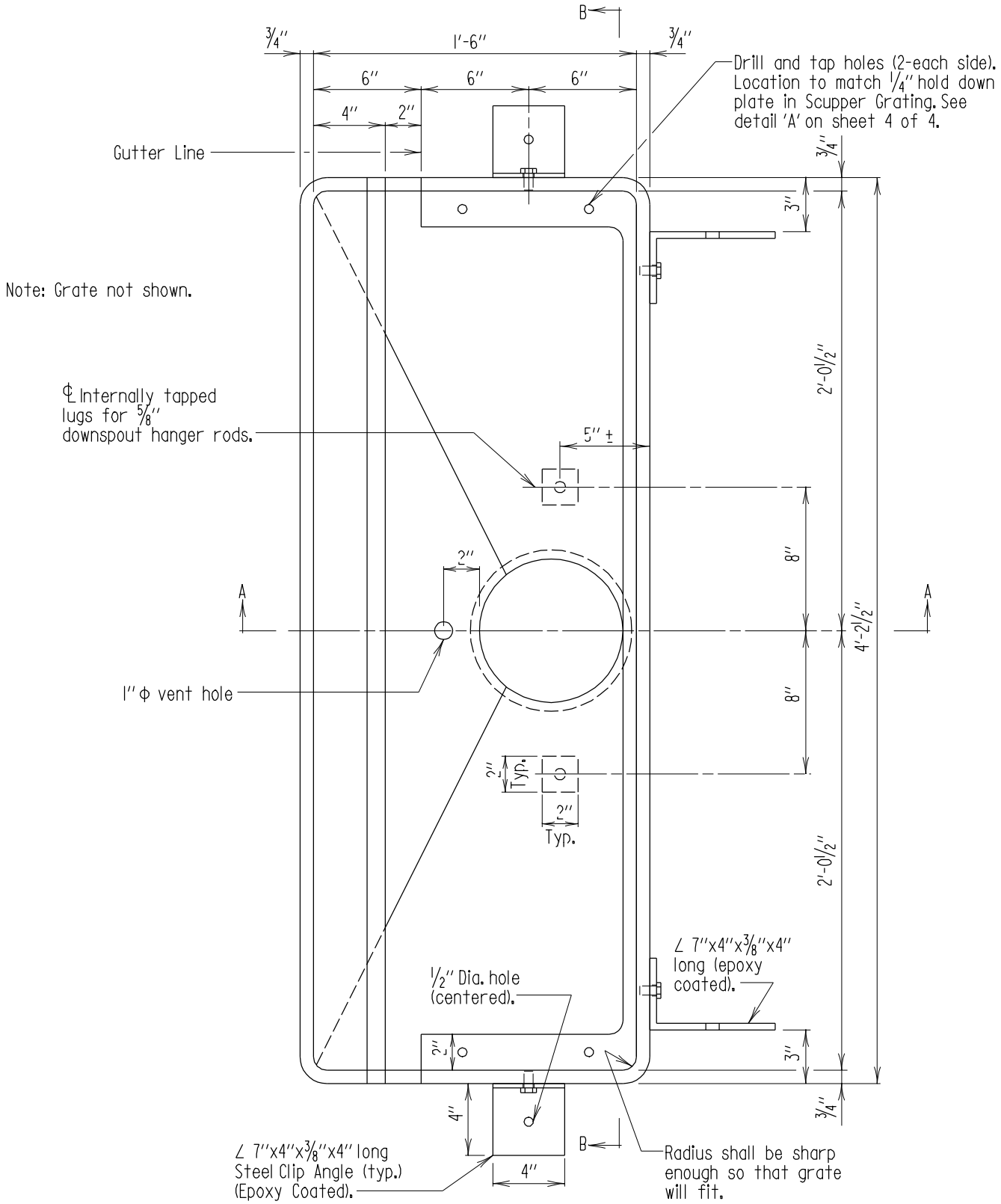

PLAN

Scale: 1 1/2" = 1'-0"

Note:
1. Wood forms may be used in the area of the scupper, as approved by the Engineer.
2. There must be a minimum of 5" of concrete under entire scupper area, with a mat of rebars equivalent in size and spacing to normal bottom mat pattern of deck. This may require the lowering of the deck in this area.

APPROVAL
E.S. Freedman DIRECTOR OFFICE OF STRUCTURES
DATE: 7/1/83

REVISIONS	
SHA	FHWA
3-16-89	6-8-90
1-7-93	·
5-20-94	·
1-22-01	·

FHWA APPROVAL
DATE: 6-8-90

STATE OF MARYLAND
DEPARTMENT OF TRANSPORTATION
STATE HIGHWAY ADMINISTRATION
OFFICE OF STRUCTURES

TYPE IV BRIDGE SCUPPER

STANDARD NO. BR-SS(0.10)-83-148 SHEET 2 OF 4

SUPER-OTHER

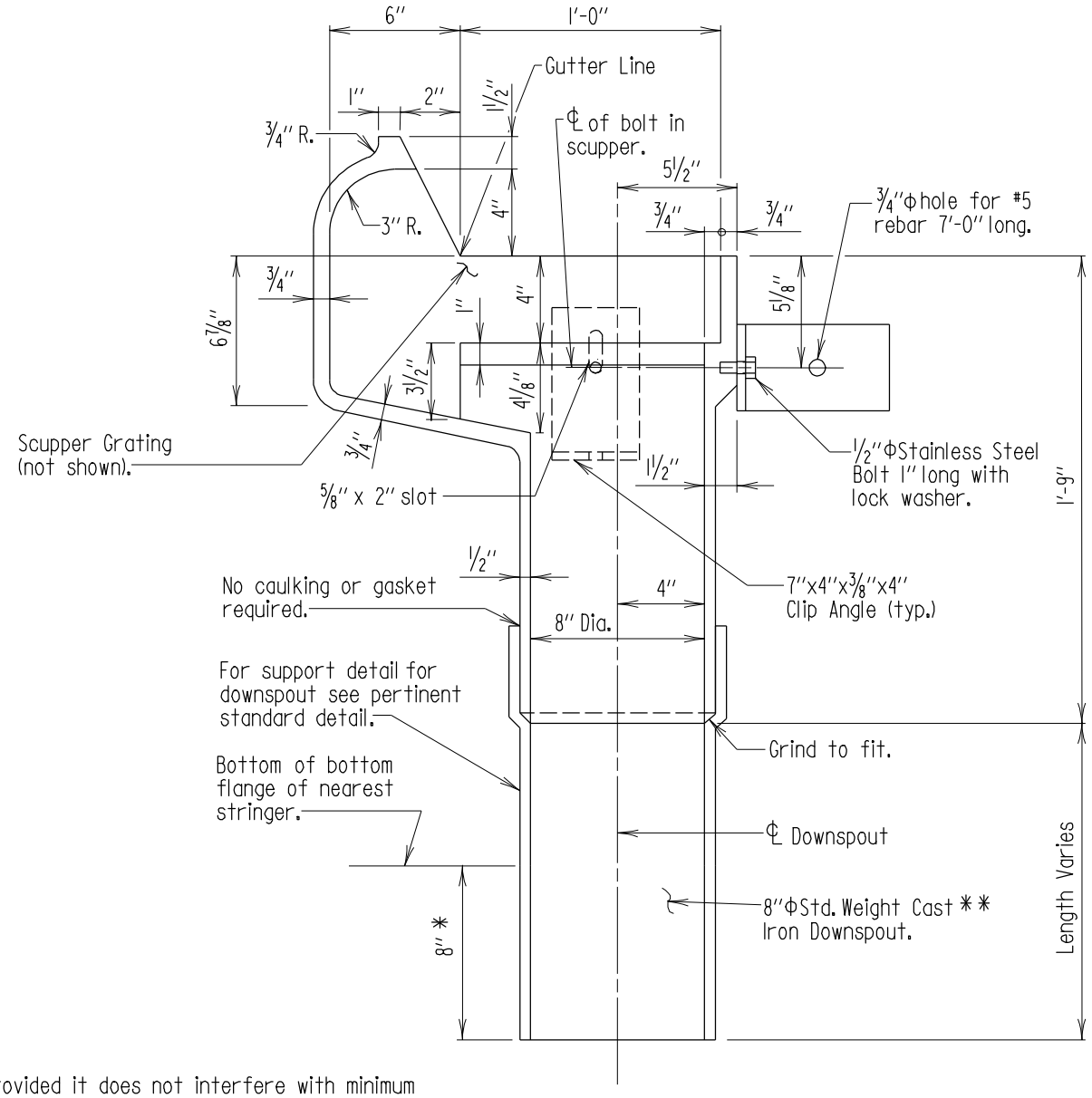

* Provided it does not interfere with minimum underclearance over roadway and/or shoulder.

** The downspout may be fiberglass. Color shall match finished bridge paint color. No additional compensation will be allowed for whichever option is chosen.

SECTION A-A

Scale: 1 1/2" = 1'-0"

APPROVAL		
E.S. Freedman DIRECTOR OFFICE OF STRUCTURES DATE: 7/1/83		
REVISIONS		
SHA	FHWA	
1-7-93	·	
5-12-93	·	
1-22-01	·	
7-14-08	·	

FHWA APPROVAL DATE: 10-6-83

STATE OF MARYLAND
DEPARTMENT OF TRANSPORTATION
STATE HIGHWAY ADMINISTRATION
OFFICE OF STRUCTURES

TYPE IV BRIDGE SCUPPER

STANDARD NO. BR-SS(0.10)-83-148

SHEET 3 OF 4

SUPER-OTHER

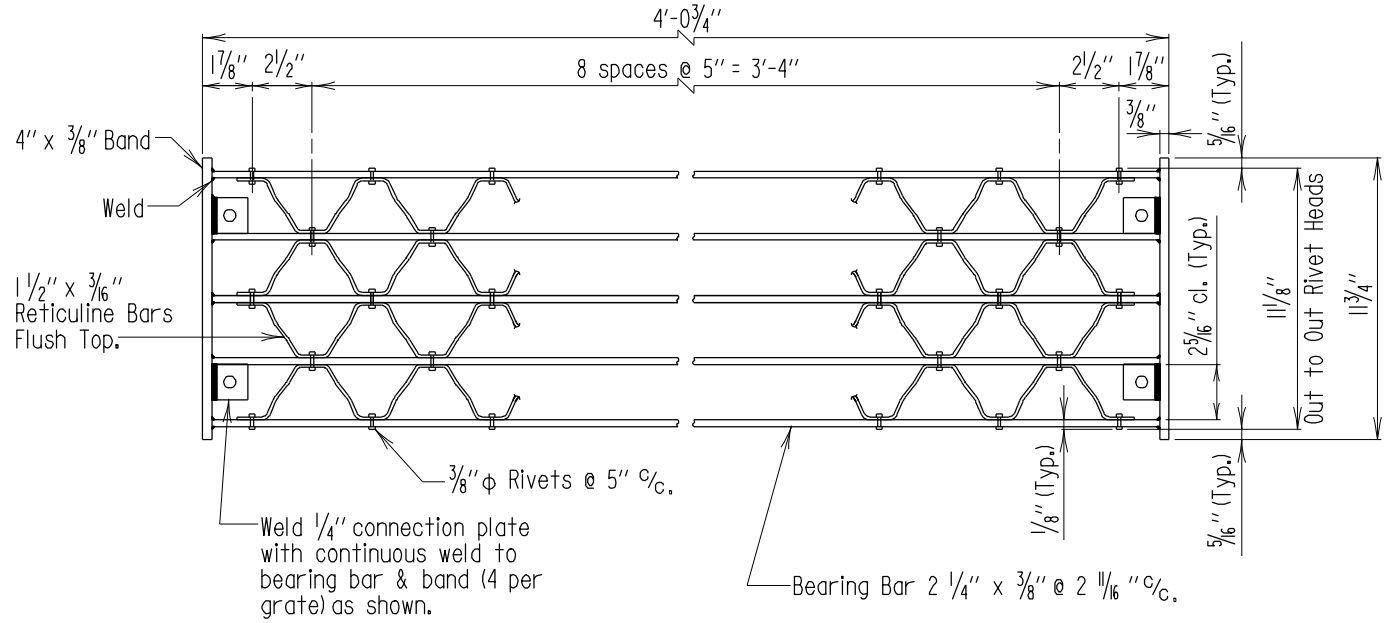

PLAN - SCUPPER GRATING

Scale: 1 1/2" = 1'-0"

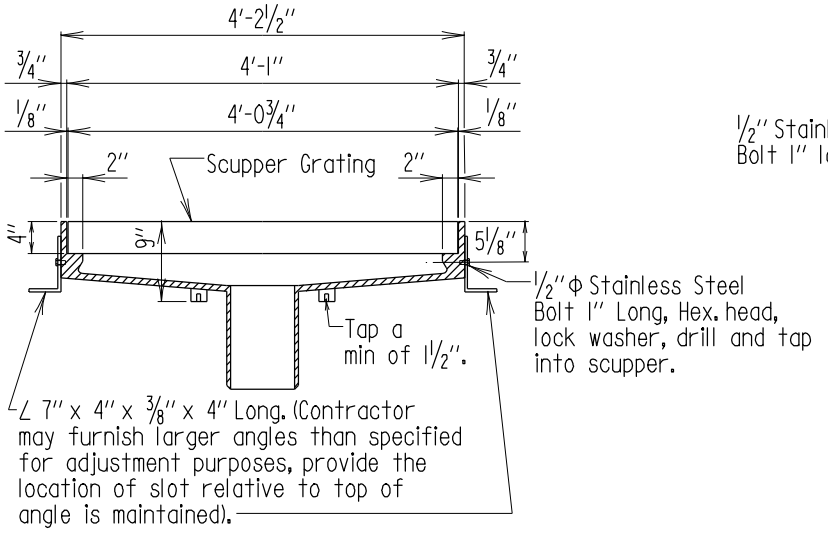

SECTION B-B

Scale: 3/4" = 1'-0"

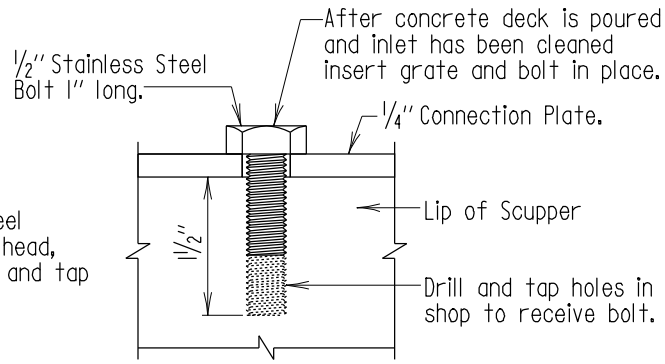

DETAIL "A"

Scale: None

APPROVAL	
B.S. Freedman DIRECTOR OFFICE OF STRUCTURES	
DATE: 7/1/83	
REVISIONS	
SHA	FHWA
1-7-93	·
·	·
·	·
·	·

FHWA APPROVAL
DATE: 10-6-83

STATE OF MARYLAND
DEPARTMENT OF TRANSPORTATION
STATE HIGHWAY ADMINISTRATION
OFFICE OF STRUCTURES

TYPE IV BRIDGE SCUPPER

STANDARD NO. BR-SS(0.10)-83-148 SHEET 4 OF 4

SUPER-OTHER

GENERAL NOTES

Specifications: Latest S.H.A. Specifications and Special Provisions for materials and construction. Latest AASHTO Standard Specifications for Highway Bridges for design.

Materials: Scuppers shall be grey cast iron, conforming to ASTM A 48 Class 30 B.

Gratings shall be structural steel conforming to ASTM A 709 Grade 36 and epoxy coated.

Stainless steel bolts shall conform to ASTM A 193, Identification Symbol B8, Type 304.

Paint: Scuppers shall be painted with one shop coat inside and outside. Shop paint shall conform to 912.02.01. Insides of scuppers to be painted with one coat of coal tar epoxy SSPC-Paint 16. Vertical showing surface in curb face and horizontal showing surface in roadway to be painted with the second and finish coats specified in 912.16, System E. Outside of scuppers exposed to atmosphere below the concrete deck slab, shall receive the field paint required for structural steel. If there is no paint indicated, the scupper shall be painted to match color of existing beam.

Shipping: Grate and Scupper shall be shipped as unit with grate hold down bolts in place (not welded).

Measurement of Payment: The furnishing, fabricating, erecting, etc. of all new scuppers for the bridge will be measured and paid for at the Contract unit price per each for the Scupper item regardless of length of downspouts, etc. If no specific items appear in the Invitation for Bids, the cost shall be included in the pertinent Superstructure Concrete item.

APPROVAL	
R.S. Freedman DIRECTOR OFFICE OF STRUCTURES DATE: 7/26/83	
REVISIONS	
SHA	FHWA
12-27-93	·
1-22-01	·
·	·
·	·

FHWA APPROVAL
DATE: 11-29-85

STATE OF MARYLAND
DEPARTMENT OF TRANSPORTATION
STATE HIGHWAY ADMINISTRATION
OFFICE OF STRUCTURES

TYPE V BRIDGE SCUPPER

STANDARD NO. BR-SS(0.12)-83-151 SHEET 1 OF 4

SUPER-OTHER

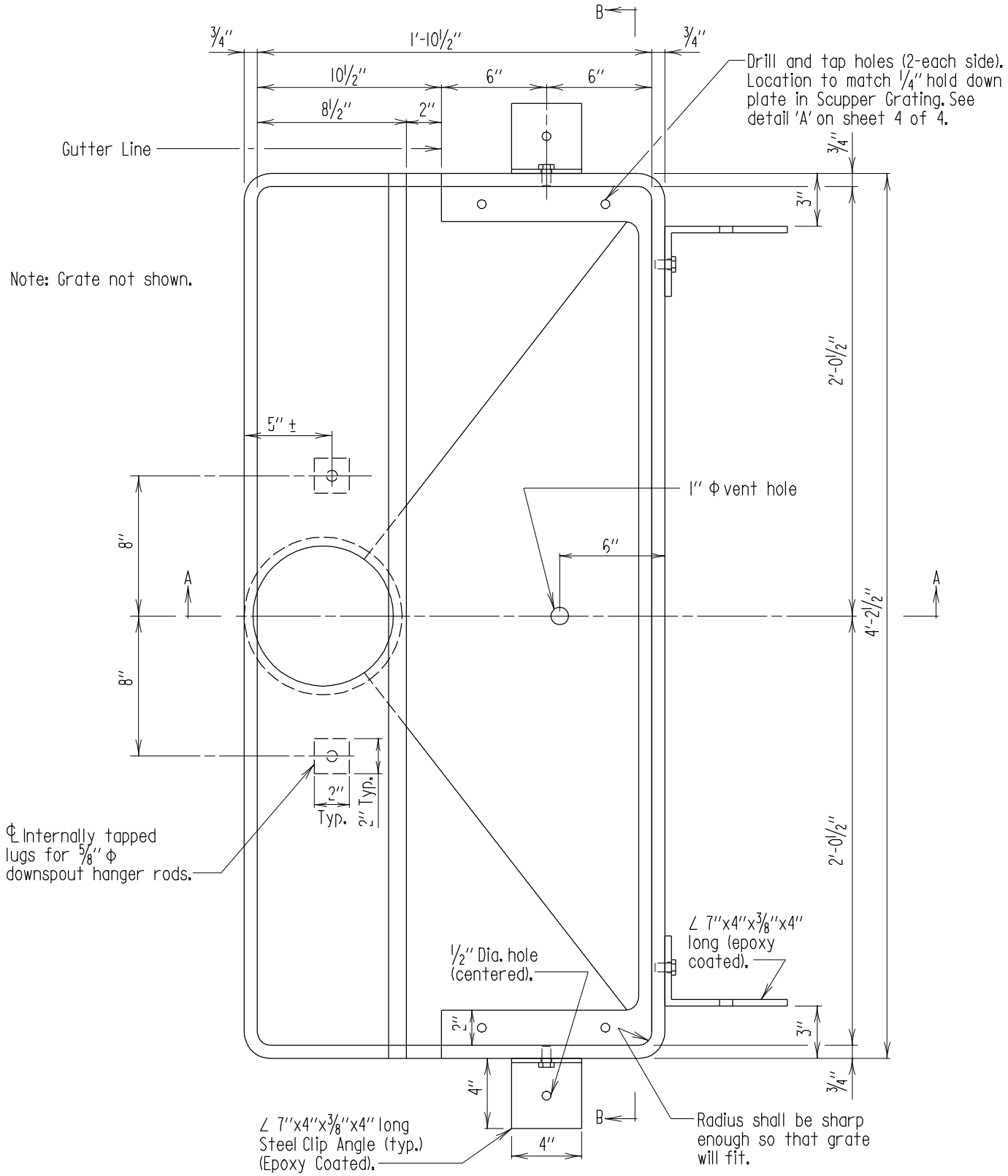

PLAN

Scale: 1 1/2" = 1'-0"

Note:
1. Wood forms may be used in the area of the scupper, as approved by the Engineer.
2. There must be a minimum of 5" of concrete under entire scupper area, with a mat of rebars equivalent in size and spacing to normal bottom mat pattern of deck. This may require the lowering of the deck in this area.

APPROVAL	
R S Friedman DIRECTOR OFFICE OF STRUCTURES	
DATE: 7/6/83	
REVISIONS	
SHA	FHWA
1-7-93	·
5-20-94	·
1-22-01	·
·	·

FHWA APPROVAL
DATE: 11-29-85

STATE OF MARYLAND
DEPARTMENT OF TRANSPORTATION
STATE HIGHWAY ADMINISTRATION
OFFICE OF STRUCTURES

TYPE V BRIDGE SCUPPER

STANDARD NO. BR-SS(0.12)-83-151

SHEET 2 OF 4

SUPER-OTHER

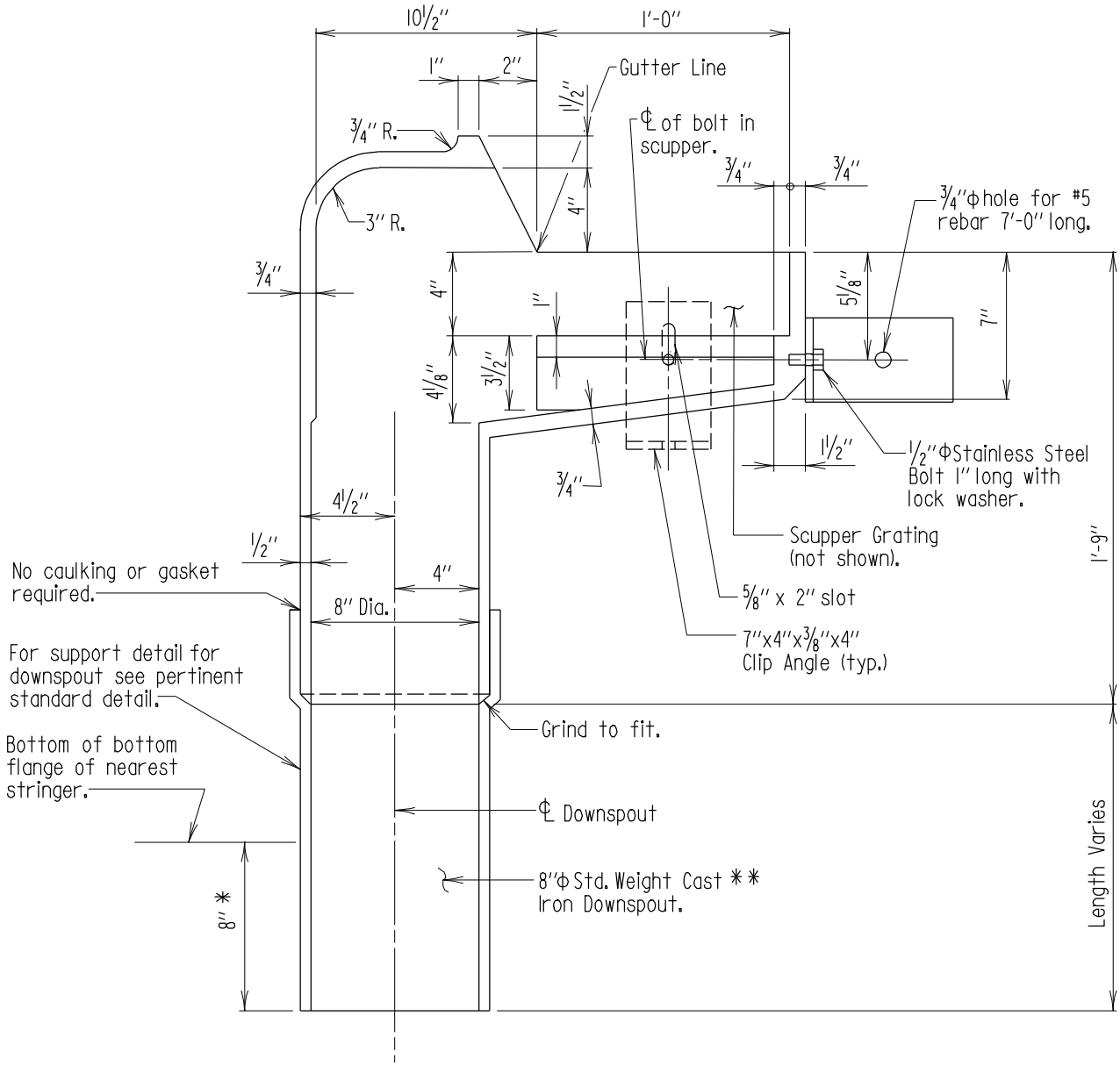

* Provided it does not interfere with minimum underclearance over roadway and/or shoulder.

** The downspout may be fiberglass. Color shall match finished bridge paint color. No additional compensation will be allowed for whichever option is chosen.

SECTION A-A

Scale: 1 1/2" = 1'-0"

APPROVAL		
E. S. Freedman DIRECTOR OFFICE OF STRUCTURES DATE: 7/6/83		
REVISIONS		
SHA	FHWA	
1-7-93	·	
5-12-93	·	
1-22-01	·	
7-14-08	·	

FHWA APPROVAL DATE: 11-29-85

STATE OF MARYLAND
DEPARTMENT OF TRANSPORTATION
STATE HIGHWAY ADMINISTRATION
OFFICE OF STRUCTURES

TYPE V BRIDGE SCUPPER

STANDARD NO. BR-SS(0.12)-83-151

SHEET 3 OF 4

SUPER-OTHER

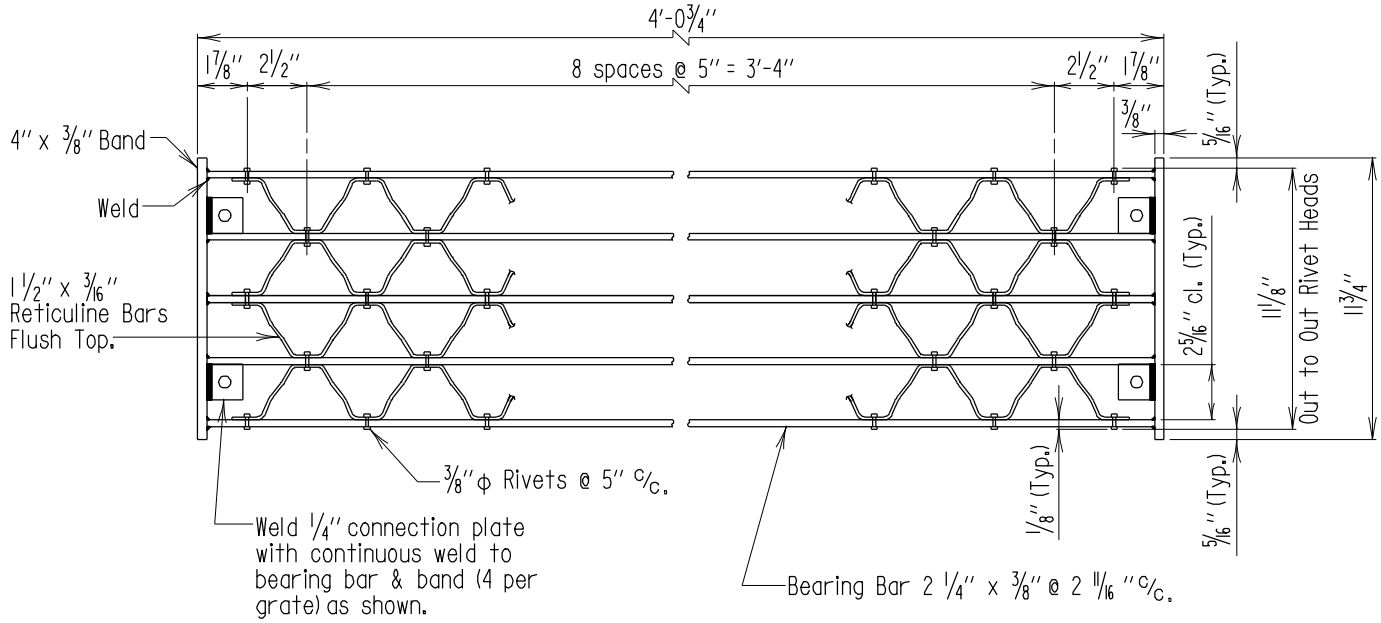

PLAN - SCUPPER GRATING

Scale: 1 1/2" = 1'-0"

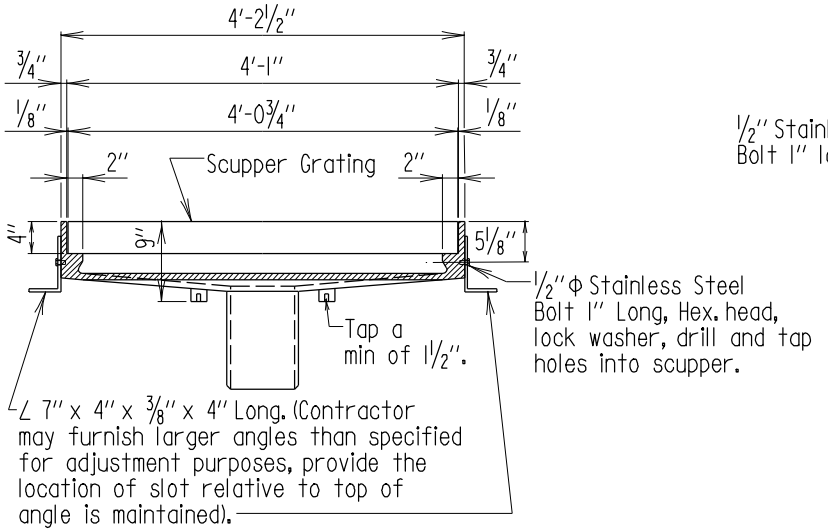

SECTION B-B

Scale: 3/4" = 1'-0"

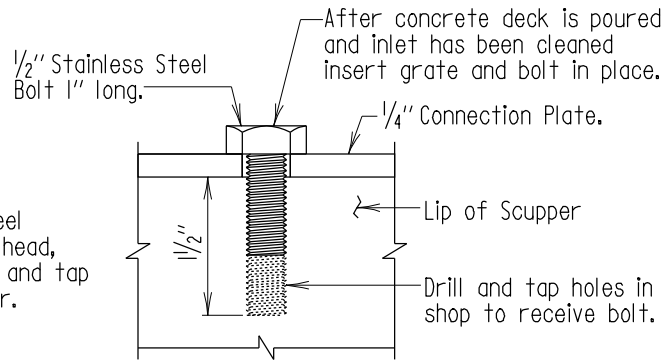

DETAIL "A"

Scale: None

APPROVAL	
R.S. Freedman DIRECTOR OFFICE OF STRUCTURES DATE: 7/6/83	
REVISIONS	
SHA	FHWA
1-7-93	·
·	·
·	·
·	·

FHWA APPROVAL
DATE: 11-29-85

STATE OF MARYLAND
DEPARTMENT OF TRANSPORTATION
STATE HIGHWAY ADMINISTRATION
OFFICE OF STRUCTURES

TYPE V BRIDGE SCUPPER

STANDARD NO. BR-SS(0.12)-83-151

SHEET 4 OF 4

SUPER-OTHER