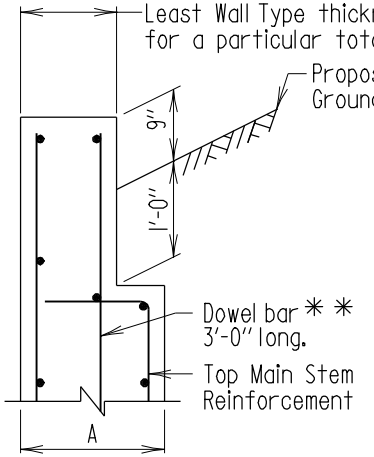

DETAIL A

Scale: None

(See note no. 1 Sheet 2)

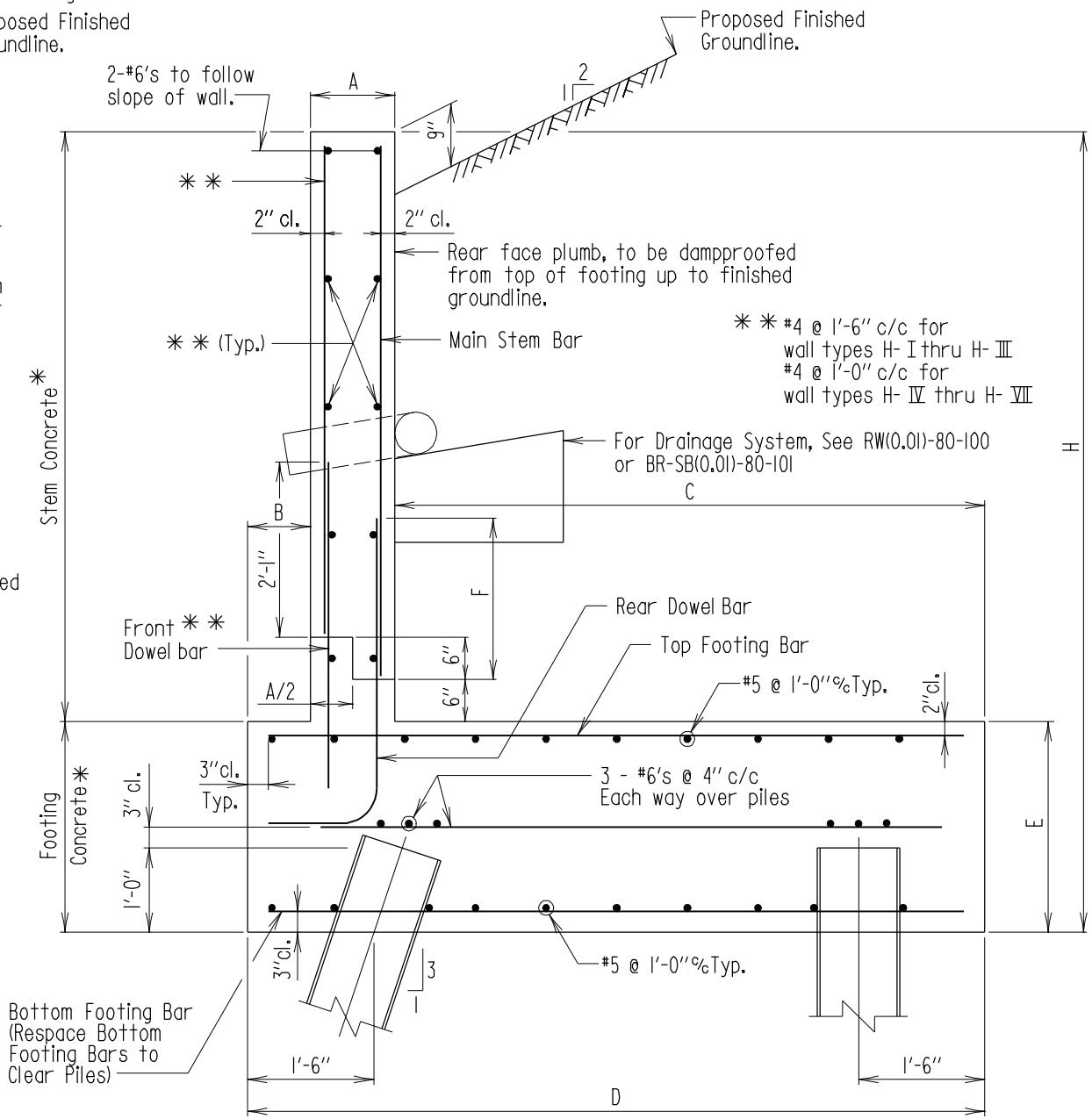

TYPICAL SECTION

Scale: 1/2" = 1'-0"

* Where specific footing concrete and stem concrete items are included in the Proposal for a particular wall, these shall be the pay limits. Where no specific items have been set up in the Proposal, the cost of wall shall be included in the main structure Contract price, i.e.; box culvert, (where wings are included in box culvert item),; retaining wall, (where no separate pay items are established), etc.

APPROVAL	
OFFICE OF STRUCTURES DIRECTOR	
DATE: 7-16-02	
REVISIONS	
SHA	FHWA
.	.
.	.
.	.
.	.

FHWA APPROVAL
DATE:

STATE OF MARYLAND
DEPARTMENT OF TRANSPORTATION
STATE HIGHWAY ADMINISTRATION
OFFICE OF STRUCTURES

TYPE H RETAINING WALL SECTION (FOR PILE FOOTING AND SLOPING GROUNDLINE)

STANDARD NO. RW(6.10)-02-344

SHEET 1 OF 2

RETAINING WALLS